# INDEX

# PRODUCT STRUCTURE

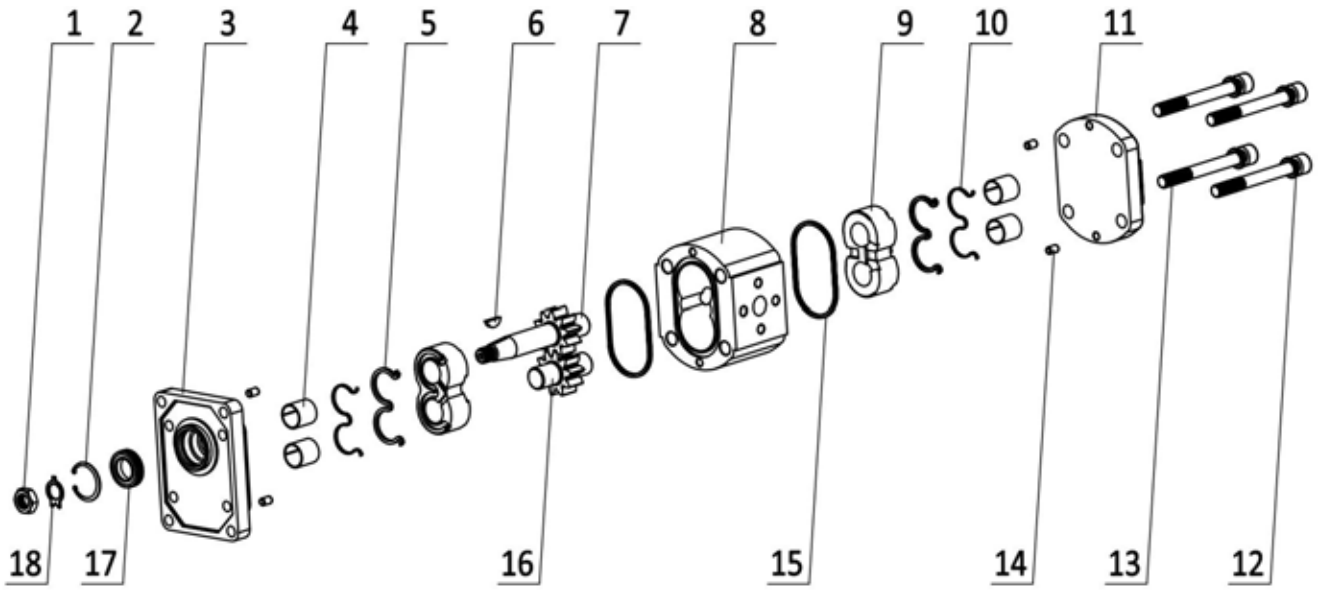


| 编号 (No.) | 描述 (Description) | 数量 (Quantity) |
|---|---|---|
| 1 | Nut | 1 |
| 2 | Stop ring | 1 |
| 3 | Front cover | 1 |
| 4 | DU bearing | 4 |
| 5 | W type seal | 2 |
| 6 | Key | 1 |
| 7 | Drive gear | 1 |
| 8 | Body | 1 |
| 9 | Bushing | 2 |
| 10 | W type retaining ring | 2 |
| 11 | End cover | 1 |
| 12 | Spring washer | 4 |
| 13 | Bolt | 4 |
| 14 | Centering pin | 4 |
| 15 | Housing seal | 2 |
| 16 | Driven gear | 1 |
| 17 | Shaft seal | 1 |
| 18 | Lock gasket | 1 |

# TECHNICAL INFORMATION

## INSTALLATION NOTES

Before starting the system on a continuous basis , we suggest to adopt as follows simple precautions .

- Check for the direction of rotation of the pump to be consistent with the drive shaft one , be sure no reversion revolved .
- Check for the proper alignment of pump shaft and motor shaft , it is necessary that the connection does not induce axial or radial loads .
- Check if contact area between seal ring and shaft is clean , remove all dirt , chips and all foreign Bodies form flanges connecting inlet and delivery ports , dust could provoke quicker wear and leakage .
- Ensure that intake and return pipes ends are always below fluid level and as far from each other as Possible .
- Fill the pump with fluid , and turn it by hand .
- Disconnect pump drain during startup to bleed air off the circuit .
- Always avoid or limit load starting for pump longer life .

## RATATION DIRECTION

Definition of rotation direction : when standing before the pump with driving shaft up with its projecting end towards the observer , the pump is rotating clockwise in case of right-hand rotation “C” , The contrary will happen with left-hand pumps “S” , keeping the same point of view .

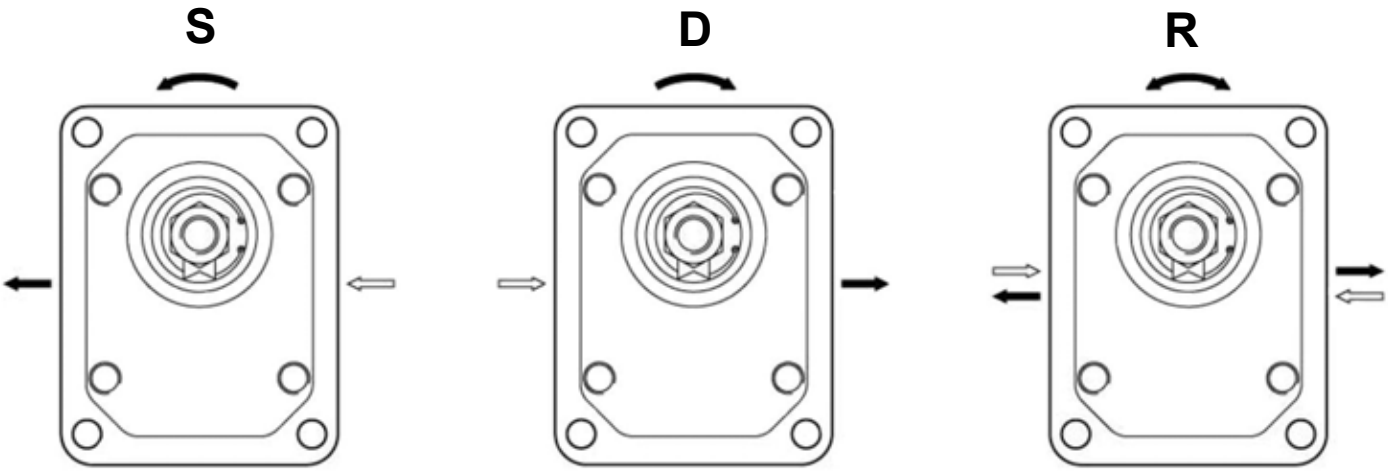


S=Anti-clockwise D=Clockwise R=Reversible

## INLET PRESSURE

Under standard working conditions , intake pipe pressure is lower than atmospheric pressure . the operating inlet pressure should range between 0.7 and 3 bars ( absolute ) .

## HYDRAULIC FLUIDS

Use specific mineral oil based hydraulic fluids having good antioxidant , anti-foaming (rapid deaeration) , anti-wear , anti--corrosion , and lubricating properties , Fluids should also comply with DIN 51525 and VDMA 24317 standards and get through 11th stage of FZG test .
For the standard models , the temperature of the fluid should range between -10℃ and 80℃ .
Fluid kinematic viscosity ranges are the following :

| | |
|---|---|
| Allowed range | 6～500cSt |
| Recommended range | 10～100cSt |
| Value allowed at startup | ～2000cSt |

## FILTER RECOMMENDATION

It is widely known that most pumps early failures are due to contaminated fluids , As a warranty can't be issued for dirt-related wear , we recommend a filter to be used , which can reduce the degree of contamination to a permissible dimension in terms of the size and concentration of dirt particles .
The filtering system shall always ensure contamination levels not exceeding the values indicated below .

| Pressure | <140 bar | 140～210 bar | >210 bar |
|---|---|---|---|
| NAS 1638 Class | 10 | 9 | 8 |
| ISO 4406 Class | 19/16 | 18/15 | 17/14 |
| Ratio βx=75 | 25～40 mμ | 12～15 mμ | 6～12 mμ |

## INLET AND DELIVERY LINES

Hydraulic system pipes should show no sudden changes of direction , sharp bends and sudden differences in cross-section .
They should not be too long or out of proportion .
Pipe cross-section should be sized so that fluid velocity does not exceed recommended values .
It is advisable to carefully consider the possible diameter reduction of the inlet or outlet pipes fitted on flange fittings .
Reference values are the following .

| | |
|---|---|
| Intake line | 0.5～1.6 m/s |
| Delivery line | 2～6 m/s |
| Return line | 1.6～3 m/s |

## PRESSURE DEFINITION

P3 = Peak max.pressure
P2 = Intermittent max.pressure
P1 = Continuous max.pressure

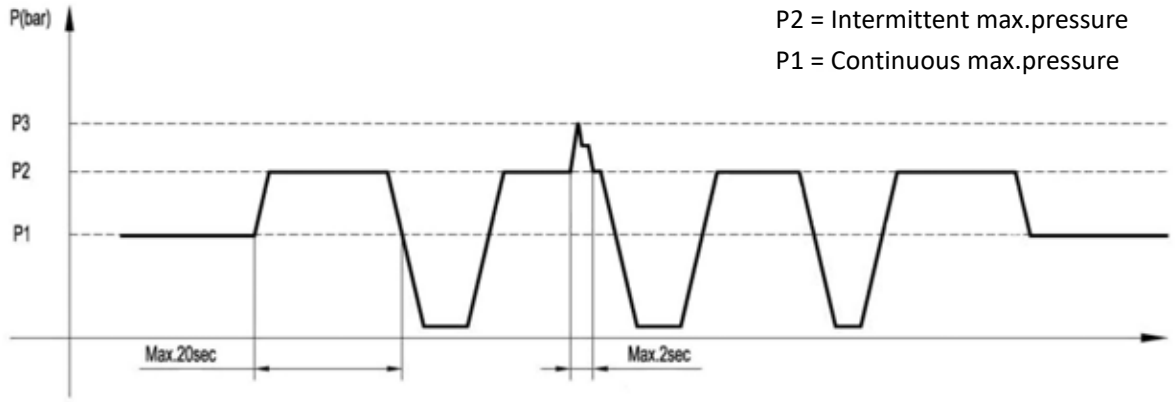


## DESIGN CALCULATIONS FOR PUMP

| | | |
|---|---|---|
| Flow | Q | L/min |
| Torque | M | Nm |
| Power | P | kW |
| Speed | n | r/min |
| Pressure | △P | bar |
| Displacement | V | $cm^3$ /rev |

| | | |
|---|---|---|
| Volumetric efficiency | ηv | ≈0.93 |
| Mechanical efficiency | ηhm | ≈0.85 |
| Total efficiency | ηt = ηv • ηhm | ≈0.80 |

| |
|---|
| $Q = V \cdot n \cdot \eta v \cdot 10^{-3}$ [ L/min ] |
| M = (△P • V )/( 62.83 • ηhm ) [ Nm ] |
| P = (△P • Q )/( 612 • ηt ) [ kW ] |

# KAP0.5

## HOW TO ORDER

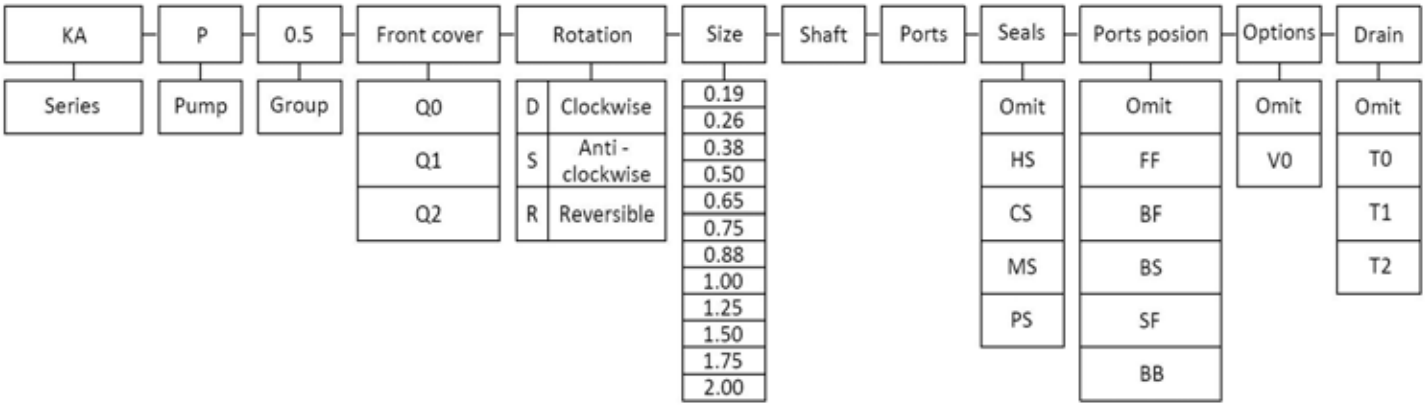


### Seals

Omit - Range between -10℃and +80℃， inlet pressure up to max. 3 bar absolute ( standard seal ) .

HS - Version suitable for fluid at hi-temperatures , range between -10℃and +120℃ .

CS - Version suitable for fluid at low-temperatures , range between -40℃and +80℃ .

MS - Version suitable for inlet pressure up to max. 3 and 6 bar absolute .

PS - Version suitable for inlet pressure up to max. 3 and 10 bar absolute .

### Ports position

Omit - Side inlet and side outlet .

FF - Front inlet and front outlet .

BF - Back inlet and front outlet .

BS - Back inlet and side outlet .

SF - Side inlet and front outlet .

BB - Back inlet and back outlet .

### Options

Omit - Have no valves .

V0 - Directional valves .

### Drain

Omit - Have no drain .

T0 - Internal drain .

T1 - External drain Φ5.

T2 - External drain G1/8 .

## Examples

KAP0.5Q0-D-0.50B0G0-BF = KA series , 0.5 group pump , Q0 front cover , Clockwise , 0.50 cc/rev , B0 shaft , G0 ports , standard seal , back inlet and front outlet .

# KAP0.5Q0

★ Use axial gap automatic compensation mechanism.

★ High sustained working pressure and long service life .

★ Anti fouling ability is strong and suitable for power units,machines and other kinds Of hydraulic systems .

**INLET** **OUTLET**

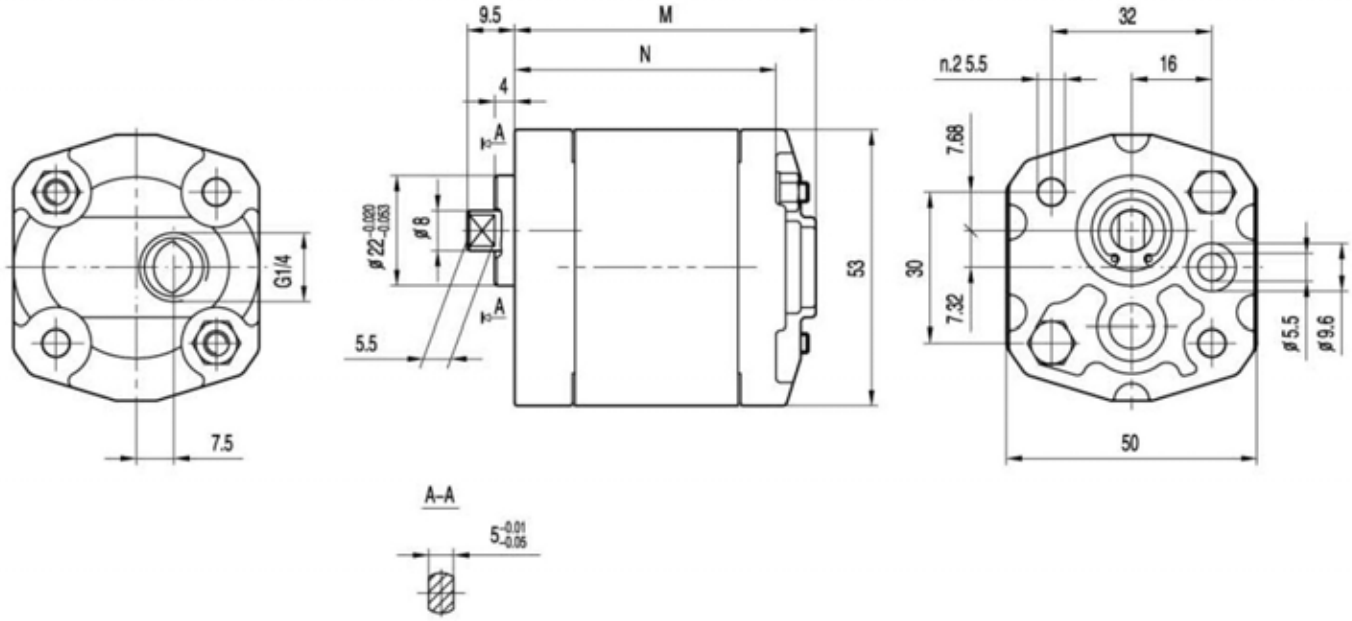


| Type | Displacement | Max. pressure | | | Max. speed | Min. speed | Dimensions | |
|---|---|---|---|---|---|---|---|---|
| | | P1 | P2 | P3 | | | N | M |
| | ($cm^3$/rev) | bar | bar | bar | (r/min) | (r/min) | mm | mm |
| KAP0.5Q0-D-0.19 | 0.19 | 200 | 225 | 250 | 7000 | 1000 | 51 | 60 |
| KAP0.5Q0-D-0.26 | 0.26 | 200 | 225 | 250 | 7000 | 1000 | 51.5 | 60.5 |
| KAP0.5Q0-D-0.38 | 0.38 | 200 | 225 | 250 | 7000 | 1000 | 52.5 | 61.5 |
| KAP0.5Q0-D-0.50 | 0.50 | 200 | 225 | 250 | 7000 | 1000 | 53.5 | 62.5 |
| KAP0.5Q0-D-0.65 | 0.65 | 200 | 225 | 250 | 7000 | 1000 | 54.5 | 63.5 |
| KAP0.5Q0-D-0.75 | 0.75 | 200 | 225 | 250 | 7000 | 1000 | 55.5 | 64.5 |
| KAP0.5Q0-D-0.88 | 0.88 | 200 | 225 | 250 | 7000 | 1000 | 56.5 | 65.5 |
| KAP0.5Q0-D-1.00 | 1.00 | 200 | 225 | 250 | 6000 | 850 | 57.5 | 66.5 |
| KAP0.5Q0-D-1.25 | 1.25 | 200 | 225 | 250 | 5000 | 700 | 59.5 | 68.5 |
| KAP0.5Q0-D-1.50 | 1.50 | 200 | 225 | 250 | 4000 | 600 | 61.5 | 70.5 |
| KAP0.5Q0-D-1.75 | 1.75 | 180 | 210 | 230 | 4000 | 600 | 63.5 | 72.5 |
| KAP0.5Q0-D-2.00 | 2.00 | 160 | 190 | 210 | 3000 | 500 | 65.5 | 74.5 |

# KAP0.5Q1

★ Use axial gap automatic compensation mechanism.

★ High sustained working pressure and long service life .

★ Anti fouling ability is strong and suitable for power units,machines and other kinds Of hydraulic systems .

**OUTLET** **INLET**

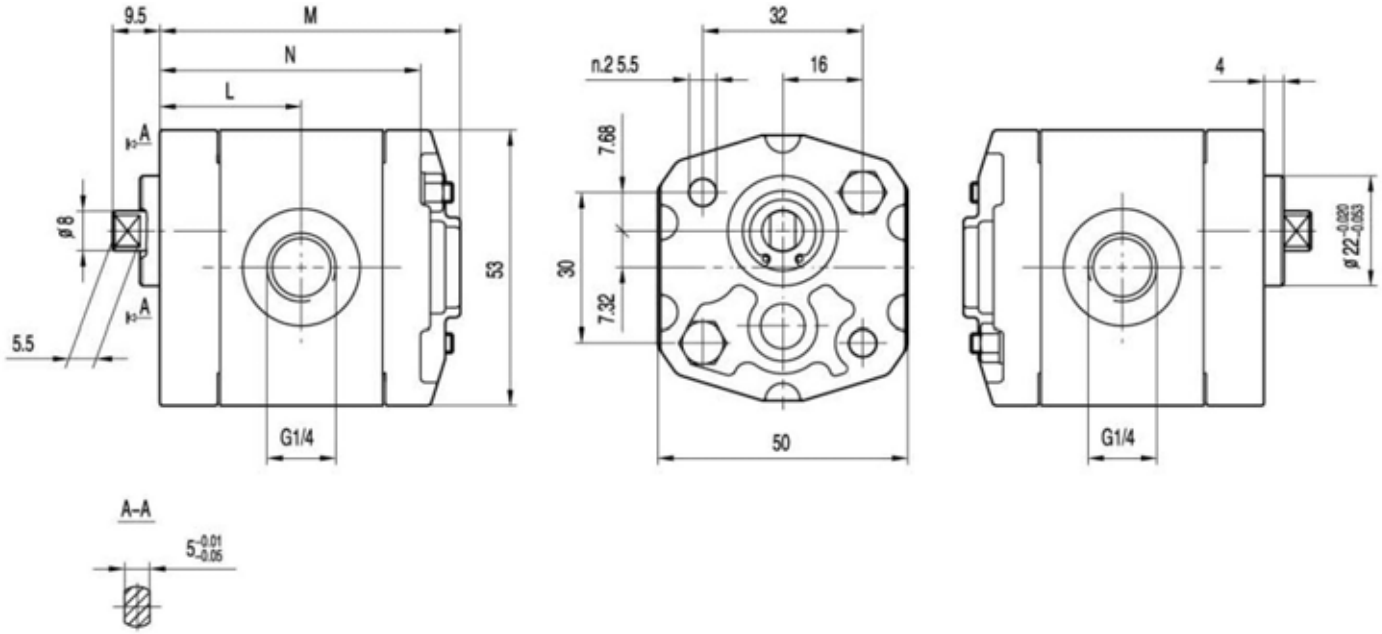


| Type | Displacement | Max. pressure | | | Max. speed | Min. speed | Dimensions | | |
|---|---|---|---|---|---|---|---|---|---|
| | | P1 | P2 | P3 | | | N | M | L |
| | ($cm^3$/rev) | bar | bar | bar | (r/min) | (r/min) | mm | mm | mm |
| KAP0.5Q1-D-0.19 | 0.19 | 200 | 225 | 250 | 7000 | 1000 | 51 | 60 | 27.2 |
| KAP0.5Q1-D-0.26 | 0.26 | 200 | 225 | 250 | 7000 | 1000 | 51.5 | 60.5 | 27.5 |
| KAP0.5Q1-D-0.38 | 0.38 | 200 | 225 | 250 | 7000 | 1000 | 52.5 | 61.5 | 28 |
| KAP0.5Q1-D-0.50 | 0.50 | 200 | 225 | 250 | 7000 | 1000 | 53.5 | 62.5 | 28.5 |
| KAP0.5Q1-D-0.65 | 0.65 | 200 | 225 | 250 | 7000 | 1000 | 54.5 | 63.5 | 29 |
| KAP0.5Q1-D-0.75 | 0.75 | 200 | 225 | 250 | 7000 | 1000 | 55.5 | 64.5 | 29.5 |
| KAP0.5Q1-D-0.88 | 0.88 | 200 | 225 | 250 | 7000 | 1000 | 56.5 | 65.5 | 30 |
| KAP0.5Q1-D-1.00 | 1.00 | 200 | 225 | 250 | 6000 | 850 | 57.5 | 66.5 | 30.5 |
| KAP0.5Q1-D-1.25 | 1.25 | 200 | 225 | 250 | 5000 | 700 | 59.5 | 68.5 | 31.5 |
| KAP0.5Q1-D-1.50 | 1.50 | 200 | 225 | 250 | 4000 | 600 | 61.5 | 70.5 | 32.5 |
| KAP0.5Q1-D-1.75 | 1.75 | 180 | 210 | 230 | 4000 | 600 | 63.5 | 72.5 | 33.5 |
| KAP0.5Q1-D-2.00 | 2.00 | 160 | 190 | 210 | 3000 | 500 | 65.5 | 74.5 | 34.5 |

# KAP0.5Q2-V0T1

- ★ Use axial gap automatic compensation mechanism.
- ★ High sustained working pressure and long service life .
- ★ Anti fouling ability is strong and suitable for power units,machines and other kinds Of hydraulic systems .

**INLET** **OUTLET**

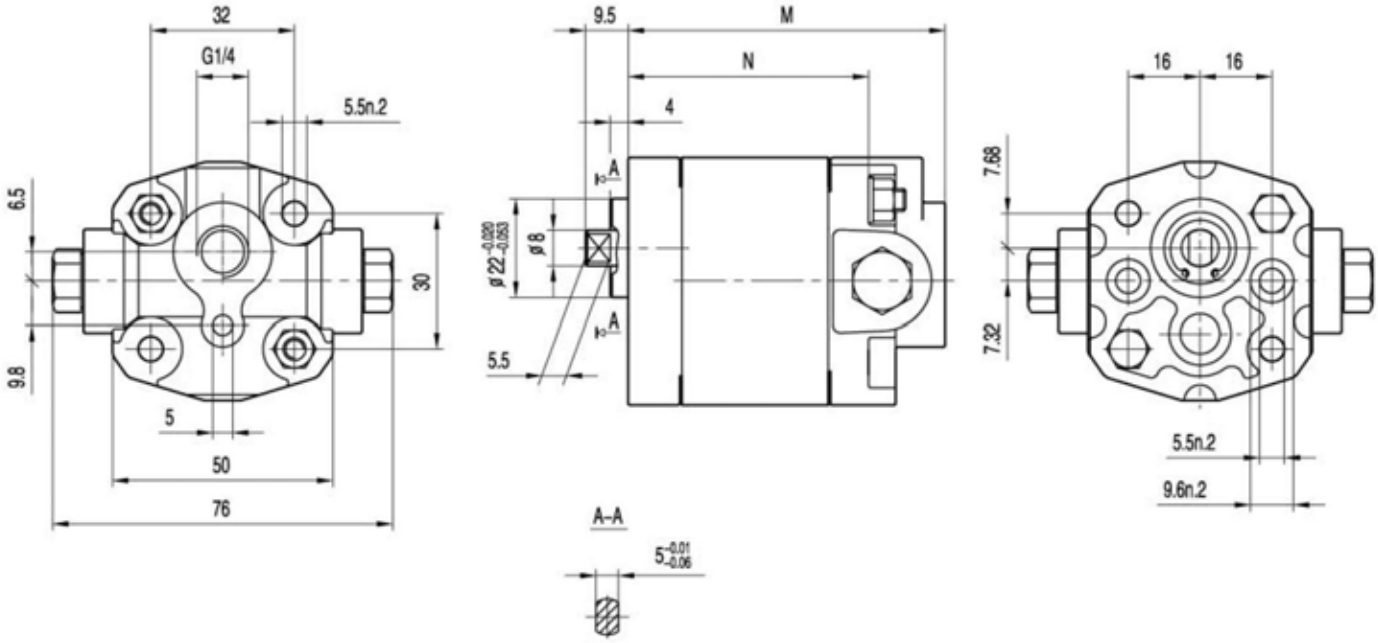


| Type | Displacement | Max. pressure | | | Max. speed | Min. speed | Dimensions | |
|---|---|---|---|---|---|---|---|---|
| | | P1 | P2 | P3 | | | N | M |
| | ($cm^3$/rev) | bar | bar | bar | (r/min) | (r/min) | mm | mm |
| KAP0.5Q2-R-0.19-V0T1 | 0.19 | 150 | 170 | 190 | 7000 | 1000 | 51 | 68 |
| KAP0.5Q2-R-0.26-V0T1 | 0.26 | 150 | 170 | 190 | 7000 | 1000 | 51.5 | 68.5 |
| KAP0.5Q2-R-0.38-V0T1 | 0.38 | 150 | 170 | 190 | 7000 | 1000 | 52.5 | 69.5 |
| KAP0.5Q2-R-0.50-V0T1 | 0.50 | 150 | 170 | 190 | 7000 | 1000 | 53.5 | 70.5 |
| KAP0.5Q2-R-0.65-V0T1 | 0.65 | 150 | 170 | 190 | 7000 | 1000 | 54.5 | 71.5 |
| KAP0.5Q2-R-0.75-V0T1 | 0.75 | 150 | 170 | 190 | 7000 | 1000 | 55.5 | 72.5 |
| KAP0.5Q2-R-0.88-V0T1 | 0.88 | 150 | 170 | 190 | 7000 | 1000 | 56.5 | 73.5 |
| KAP0.5Q2-R-1.00-V0T1 | 1.00 | 150 | 170 | 190 | 6000 | 850 | 57.5 | 74.5 |
| KAP0.5Q2-R-1.25-V0T1 | 1.25 | 150 | 170 | 190 | 5000 | 700 | 59.5 | 76.5 |
| KAP0.5Q2-R-1.50-V0T1 | 1.50 | 150 | 170 | 190 | 4000 | 600 | 61.5 | 78.5 |
| KAP0.5Q2-R-1.75-V0T1 | 1.75 | 150 | 170 | 190 | 4000 | 600 | 63.5 | 80.5 |
| KAP0.5Q2-R-2.00-V0T1 | 2.00 | 150 | 170 | 190 | 3000 | 500 | 65.5 | 82.5 |

# KAP0.5

FRONT COVER SHAFTS

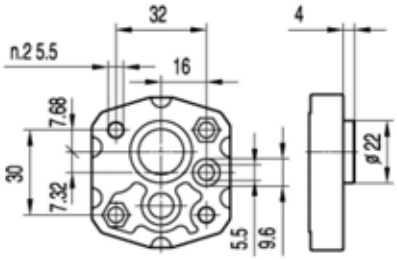


Q0

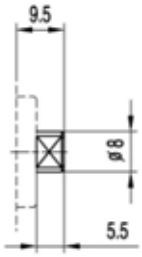


B0

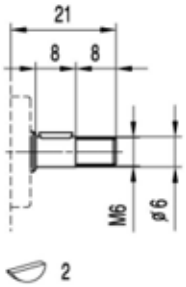


P0

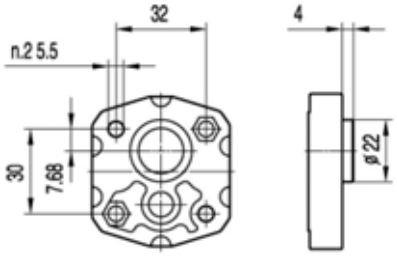


Q1

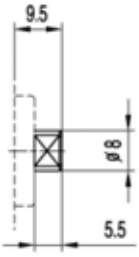


B0

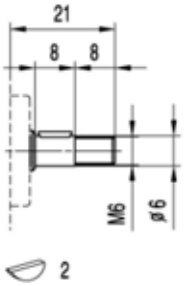


P0

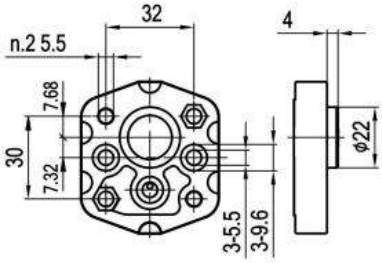


Q2

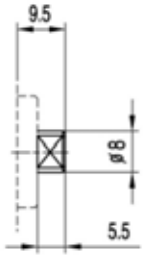


B0

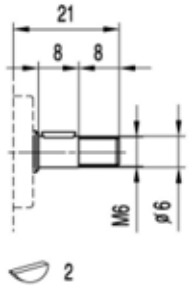


P0

# KAP0.5

## PORTS


G0

| TYPE | INLET | OUTLET |
|---|---|---|
| | A | a |
| KAP0.5..0.19 ～ KAP0.5..2.00 | G1/4 | Φ5.5 |


G1

| TYPE | INLET | OUTLET |
|---|---|---|
| | A | a |
| KAP0.5..0.19 ～ KAP0.5..2.00 | G3/8 | Φ5.5 |

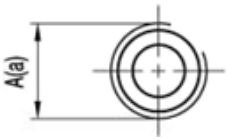


M0

| TYPE | INLET | OUTLET |
|---|---|---|
| | A | a |
| KAP0.5..0.19 ～ KAP0.5..2.00 | M10×1 | M10×1 |

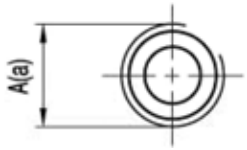


L0

| TYPE | INLET | OUTLET |
|---|---|---|
| | A | a |
| KAP0.5..0.19 ～ KAP0.5..2.00 | G1/4 | G1/4 |

# KAP0.5

## OPTIONS

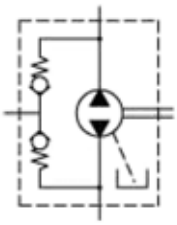

V0

| DISCRIPTION |
| --- |
| Directional valves with external drain . |

# KAP1

## HOW TO ORDER

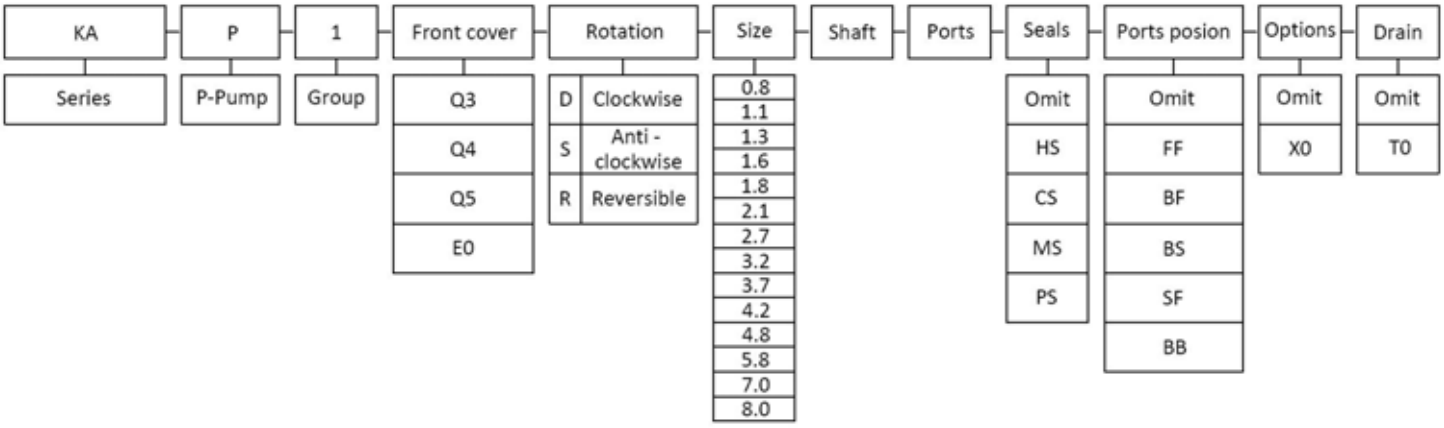


### Seals

Omit - Range between -10℃and +80℃， inlet pressure up to max. 3 bar absolute ( standard seal ) .

HS - Version suitable for fluid at hi-temperatures , range between -10℃and +120℃ .

CS - Version suitable for fluid at low-temperatures , range between -40℃and +80℃ .

MS - Version suitable for inlet pressure up to max. 3 and 6 bar absolute .

PS - Version suitable for inlet pressure up to max. 3 and 10 bar absolute .

### Ports position

Omit - Side inlet and side outlet .

FF - Front inlet and front outlet .

BF - Back inlet and front outlet .

BS - Back inlet and side outlet .

SF - Side inlet and front outlet .

BB - Back inlet and back outlet

### Options

Omit - Have no valves .

X0 - Pressure valve .

### Drain

Omit - Have no drain .

T0 - Internal drain .

## Examples

KAP1Q3-D-2.1B1G4-BF = KA series , 1 group pump , Q3 front cover , Clockwise , 2.1 cc/rev , B1 shaft , G4 ports , standard seal , back inlet and front outlet .

# KAP1Q3

★ Use axial gap automatic compensation mechanism.

★ High sustained working pressure and long service life .

★ Anti fouling ability is strong and suitable for power units,machines and other kinds Of hydraulic systems .

**INLET** **OUTLET**

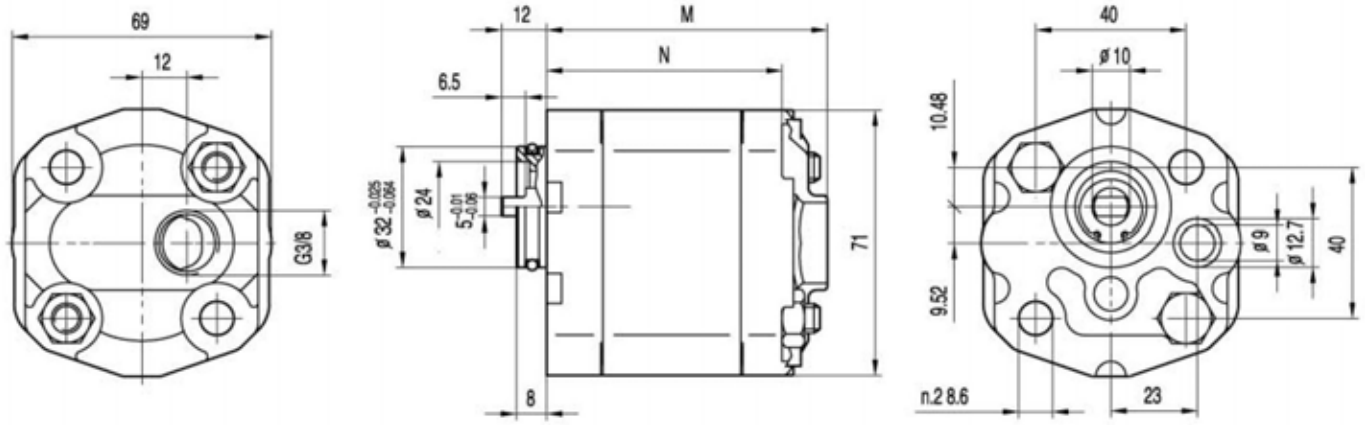


| Type | Displacement | Max. pressure | | | Max. speed | Min. speed | Dimensions | |
|---|---|---|---|---|---|---|---|---|
| | | P1 | P2 | P3 | | | N | M |
| | ($cm^3$/rev) | bar | bar | bar | (r/min) | (r/min) | mm | mm |
| KAP1Q3-D-0.8 | 0.8 | 200 | 225 | 250 | 6000 | 1000 | 61.5 | 73.5 |
| KAP1Q3-D-1.1 | 1.1 | 200 | 225 | 250 | 6000 | 1000 | 62 | 74 |
| KAP1Q3-D-1.3 | 1.3 | 200 | 225 | 250 | 6000 | 1000 | 63 | 75 |
| KAP1Q3-D-1.6 | 1.6 | 200 | 225 | 250 | 6000 | 1000 | 64 | 76 |
| KAP1Q3-D-1.8 | 1.8 | 200 | 225 | 250 | 6000 | 1000 | 65 | 77 |
| KAP1Q3-D-2.1 | 2.1 | 200 | 225 | 250 | 6000 | 1000 | 66 | 78 |
| KAP1Q3-D-2.7 | 2.7 | 200 | 225 | 250 | 6000 | 800 | 68 | 80 |
| KAP1Q3-D-3.2 | 3.2 | 200 | 225 | 250 | 5000 | 800 | 70 | 82 |
| KAP1Q3-D-3.7 | 3.7 | 200 | 225 | 250 | 4500 | 800 | 72 | 84 |
| KAP1Q3-D-4.2 | 4.2 | 200 | 225 | 250 | 4000 | 800 | 74 | 86 |
| KAP1Q3-D-4.8 | 4.8 | 190 | 210 | 230 | 3500 | 600 | 76 | 88 |
| KAP1Q3-D-5.8 | 5.8 | 190 | 210 | 230 | 3000 | 600 | 80 | 92 |
| KAP1Q3-D-7.0 | 7.0 | 160 | 180 | 200 | 2500 | 600 | 84 | 96 |
| KAP1Q3-D-8.0 | 8.0 | 160 | 180 | 200 | 2100 | 600 | 88 | 100 |

# KAP1Q4

★ Use axial gap automatic compensation mechanism.

★ High sustained working pressure and long service life .

★ Anti fouling ability is strong and suitable for power units,machines and other kinds Of hydraulic systems .

**OUTLET** **INLET**

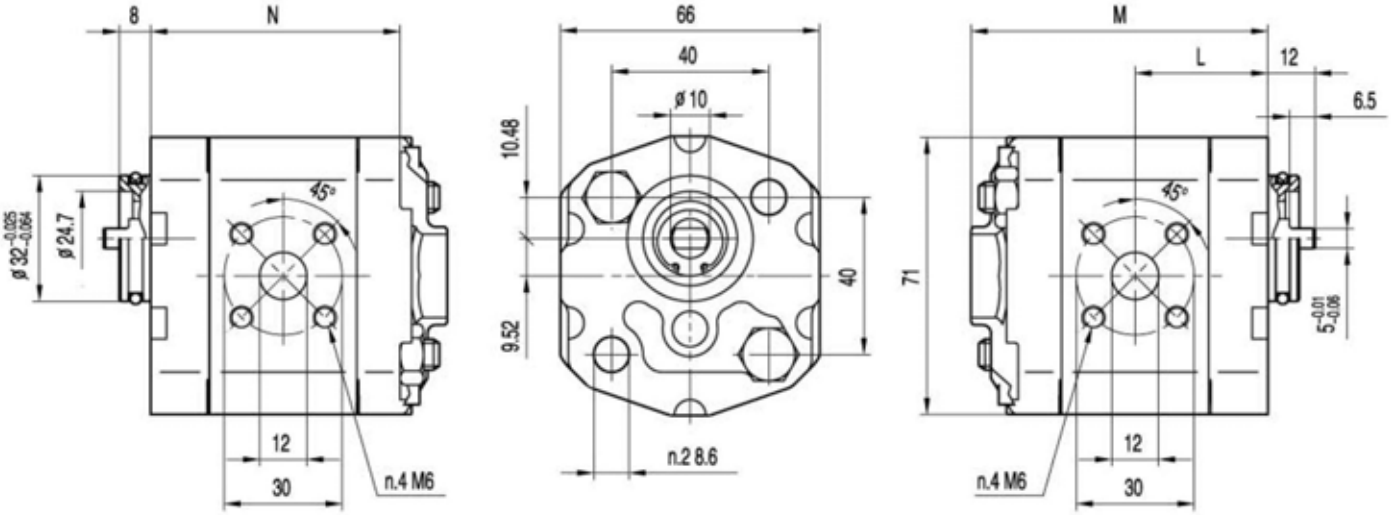


| Type | Displacement | Max. pressure | | | Max. speed | Min. speed | Dimensions | | |
|---|---|---|---|---|---|---|---|---|---|
| | | P1 | P2 | P3 | | | N | M | L |
| | ($cm^3$/rev) | bar | bar | bar | (r/min) | (r/min) | mm | mm | mm |
| KAP1Q4-D-0.8 | 0.8 | 200 | 225 | 250 | 6000 | 1000 | 61.5 | 73.5 | 32.8 |
| KAP1Q4-D-1.1 | 1.1 | 200 | 225 | 250 | 6000 | 1000 | 62 | 74 | 33 |
| KAP1Q4-D-1.3 | 1.3 | 200 | 225 | 250 | 6000 | 1000 | 63 | 75 | 33.5 |
| KAP1Q4-D-1.6 | 1.6 | 200 | 225 | 250 | 6000 | 1000 | 64 | 76 | 34 |
| KAP1Q4-D-1.8 | 1.8 | 200 | 225 | 250 | 6000 | 1000 | 65 | 77 | 34.5 |
| KAP1Q4-D-2.1 | 2.1 | 200 | 225 | 250 | 6000 | 1000 | 66 | 78 | 35 |
| KAP1Q4-D-2.7 | 2.7 | 200 | 225 | 250 | 6000 | 800 | 68 | 80 | 36 |
| KAP1Q4-D-3.2 | 3.2 | 200 | 225 | 250 | 5000 | 800 | 70 | 82 | 37 |
| KAP1Q4-D-3.7 | 3.7 | 200 | 225 | 250 | 4500 | 800 | 72 | 84 | 38 |
| KAP1Q4-D-4.2 | 4.2 | 200 | 225 | 250 | 4000 | 800 | 74 | 86 | 39 |
| KAP1Q4-D-4.8 | 4.8 | 190 | 210 | 230 | 3500 | 600 | 76 | 88 | 40 |
| KAP1Q4-D-5.8 | 5.8 | 190 | 210 | 230 | 3000 | 600 | 80 | 92 | 42 |
| KAP1Q4-D-7.0 | 7.0 | 160 | 180 | 200 | 2500 | 600 | 84 | 96 | 44 |
| KAP1Q4-D-8.0 | 8.0 | 160 | 180 | 200 | 2100 | 600 | 88 | 100 | 46 |

# KAP1Q5

★ Use axial gap automatic compensation mechanism.

★ High sustained working pressure and long service life .

★ Anti fouling ability is strong and suitable for power units,machines and other kinds Of hydraulic systems .

**OUTET** **INLET**

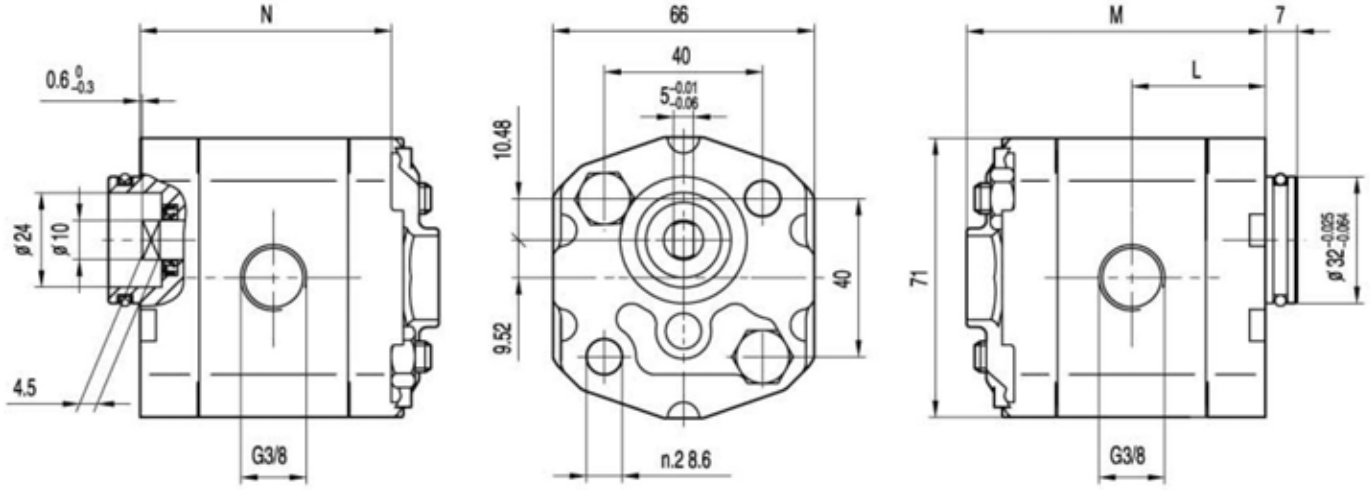


| Type | Displacement | Max. pressure | | | Max. speed | Min. speed | Dimensions | | |
|---|---|---|---|---|---|---|---|---|---|
| | | P1 | P2 | P3 | | | N | M | L |
| | ($cm^3$/rev) | bar | bar | bar | (r/min) | (r/min) | mm | mm | mm |
| KAP1Q5-D-0.8 | 0.8 | 200 | 225 | 250 | 6000 | 1000 | 61.5 | 73.5 | 32.8 |
| KAP1Q5-D-1.1 | 1.1 | 200 | 225 | 250 | 6000 | 1000 | 62 | 74 | 33 |
| KAP1Q5-D-1.3 | 1.3 | 200 | 225 | 250 | 6000 | 1000 | 63 | 75 | 33.5 |
| KAP1Q5-D-1.6 | 1.6 | 200 | 225 | 250 | 6000 | 1000 | 64 | 76 | 34 |
| KAP1Q5-D-1.8 | 1.8 | 200 | 225 | 250 | 6000 | 1000 | 65 | 77 | 34.5 |
| KAP1Q5-D-2.1 | 2.1 | 200 | 225 | 250 | 6000 | 1000 | 66 | 78 | 35 |
| KAP1Q5-D-2.7 | 2.7 | 200 | 225 | 250 | 6000 | 800 | 68 | 80 | 36 |
| KAP1Q5-D-3.2 | 3.2 | 200 | 225 | 250 | 5000 | 800 | 70 | 82 | 37 |
| KAP1Q5-D-3.7 | 3.7 | 200 | 225 | 250 | 4500 | 800 | 72 | 84 | 38 |
| KAP1Q5-D-4.2 | 4.2 | 200 | 225 | 250 | 4000 | 800 | 74 | 86 | 39 |
| KAP1Q5-D-4.8 | 4.8 | 190 | 210 | 230 | 3500 | 600 | 76 | 88 | 40 |
| KAP1Q5-D-5.8 | 5.8 | 190 | 210 | 230 | 3000 | 600 | 80 | 92 | 42 |
| KAP1Q5-D-7.0 | 7.0 | 160 | 180 | 200 | 2500 | 600 | 84 | 96 | 44 |
| KAP1Q5-D-8.0 | 8.0 | 160 | 180 | 200 | 2100 | 600 | 88 | 100 | 46 |

# KAP1E0

★ Use axial gap automatic compensation mechanism.

★ High sustained working pressure and long service life .

★ Anti fouling ability is strong and suitable for power units,machines and other kinds Of hydraulic systems .

**INLET** **OUTLET**

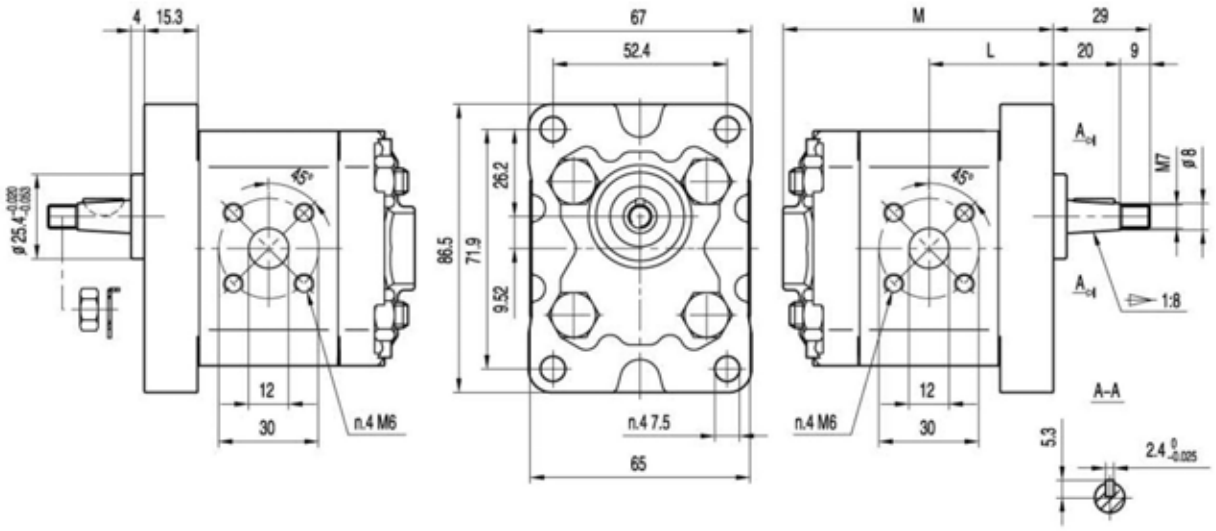


| Type | Displacement | Max. pressure | | | Max. speed | Min. speed | Dimensions | |
|---|---|---|---|---|---|---|---|---|
| | | P1 | P2 | P3 | | | L | M |
| | ($cm^3$/rev) | bar | bar | bar | (r/min) | (r/min) | mm | mm |
| KAP1E0-S-0.8 | 0.8 | 200 | 225 | 250 | 6000 | 1000 | 32.8 | 73.5 |
| KAP1E0-S-1.1 | 1.1 | 200 | 225 | 250 | 6000 | 1000 | 33 | 74 |
| KAP1E0-S-1.3 | 1.3 | 200 | 225 | 250 | 6000 | 1000 | 33.5 | 75 |
| KAP1E0-S-1.6 | 1.6 | 200 | 225 | 250 | 6000 | 1000 | 34 | 76 |
| KAP1E0-S-1.8 | 1.8 | 200 | 225 | 250 | 6000 | 1000 | 34.5 | 77 |
| KAP1E0-S-2.1 | 2.1 | 200 | 225 | 250 | 6000 | 1000 | 35 | 78 |
| KAP1E0-S-2.7 | 2.7 | 200 | 225 | 250 | 6000 | 800 | 36 | 80 |
| KAP1E0-S-3.2 | 3.2 | 200 | 225 | 250 | 5000 | 800 | 37 | 82 |
| KAP1E0-S-3.7 | 3.7 | 200 | 225 | 250 | 4500 | 800 | 38 | 84 |
| KAP1E0-S-4.2 | 4.2 | 200 | 225 | 250 | 4000 | 800 | 39 | 86 |
| KAP1E0-S-4.8 | 4.8 | 190 | 210 | 230 | 3500 | 600 | 40 | 88 |
| KAP1E0-S-5.8 | 5.8 | 190 | 210 | 230 | 3000 | 600 | 42 | 92 |
| KAP1E0-S-7.0 | 7.0 | 160 | 180 | 200 | 2500 | 600 | 44 | 96 |
| KAP1E0-S-8.0 | 8.0 | 160 | 180 | 200 | 2100 | 600 | 46 | 100 |

# KAP1E0-X0T0

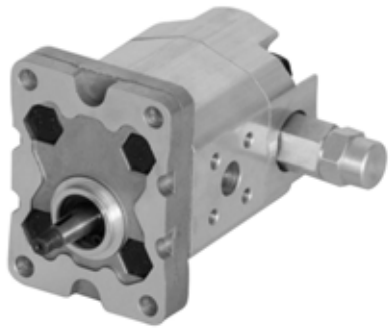

★ Use axial gap automatic compensation mechanism.

★ High sustained working pressure and long service life .

★ Anti fouling ability is strong and suitable for power units,machines and other kinds Of hydraulic systems .

**OUTLET** **INLET**

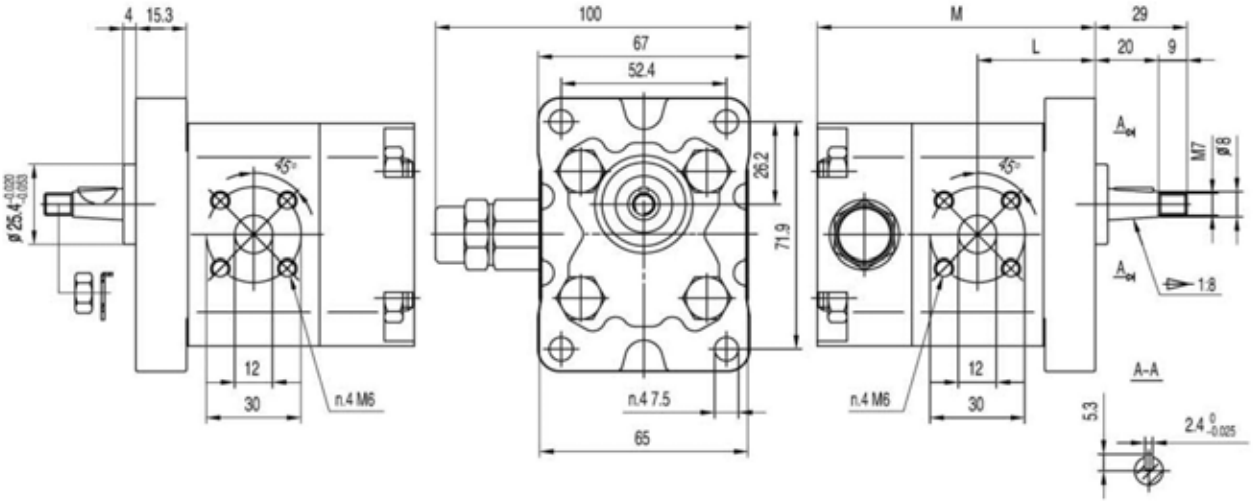


| Type | Displacement | Max. pressure | | | Max. speed | Min. speed | Dimensions | |
|---|---|---|---|---|---|---|---|---|
| | | P1 | P2 | P3 | | | L | M |
| | ($cm^3$/rev) | bar | bar | bar | (r/min) | (r/min) | mm | mm |
| KAP1E0-D-0.8-X0T0 | 0.8 | 200 | 225 | 250 | 6000 | 1000 | 32.8 | 82.5 |
| KAP1E0-D-1.1-X0T0 | 1.1 | 200 | 225 | 250 | 6000 | 1000 | 33 | 83 |
| KAP1E0-D-1.3-X0T0 | 1.3 | 200 | 225 | 250 | 6000 | 1000 | 33.5 | 84 |
| KAP1E0-D-1.6-X0T0 | 1.6 | 200 | 225 | 250 | 6000 | 1000 | 34 | 85 |
| KAP1E0-D-1.8-X0T0 | 1.8 | 200 | 225 | 250 | 6000 | 1000 | 34.5 | 86 |
| KAP1E0-D-2.1-X0T0 | 2.1 | 200 | 225 | 250 | 6000 | 1000 | 35 | 87 |
| KAP1E0-D-2.7-X0T0 | 2.7 | 200 | 225 | 250 | 6000 | 800 | 36 | 89 |
| KAP1E0-D-3.2-X0T0 | 3.2 | 200 | 225 | 250 | 5000 | 800 | 37 | 91 |
| KAP1E0-D-3.7-X0T0 | 3.7 | 200 | 225 | 250 | 4500 | 800 | 38 | 93 |
| KAP1E0-D-4.2-X0T0 | 4.2 | 200 | 225 | 250 | 4000 | 800 | 39 | 95 |
| KAP1E0-D-4.8-X0T0 | 4.8 | 190 | 210 | 230 | 3500 | 600 | 40 | 97 |
| KAP1E0-D-5.8-X0T0 | 5.8 | 190 | 210 | 230 | 3000 | 600 | 42 | 101 |
| KAP1E0-D-7.0-X0T0 | 7.0 | 160 | 180 | 200 | 2500 | 600 | 44 | 105 |
| KAP1E0-D-8.0-X0T0 | 8.0 | 160 | 180 | 200 | 2100 | 600 | 46 | 109 |

# KAP1

FRONT COVER SHAFTS

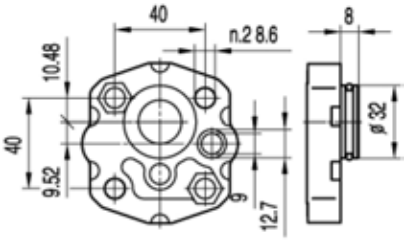


Q3

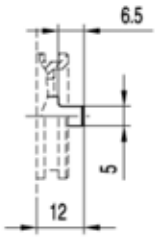


B1

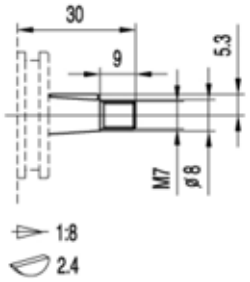


Z0

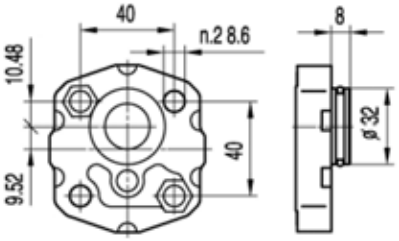


Q4

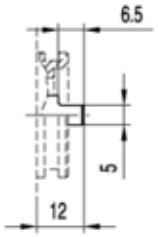


B1

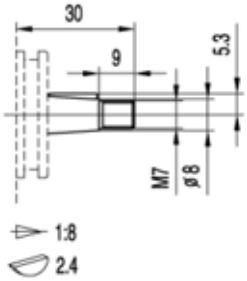


Z0

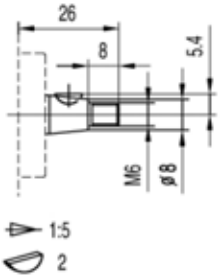


Z2

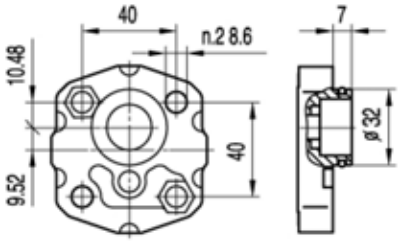


Q5

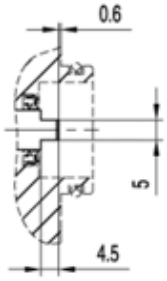


B2

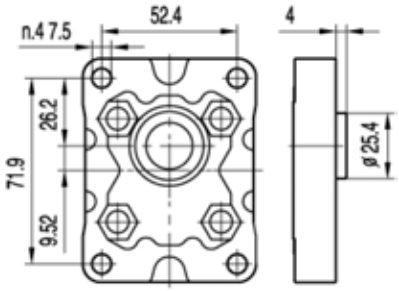


E0

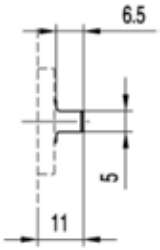


B3

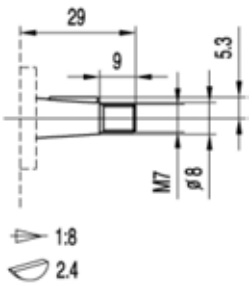


Z1

# KAP1

## PORTS


G2

| TYPE | INLET | OUTLET |
|---|---|---|
| | A | a |
| KAP1..0.8 ～ KAP1..8.0 | G1/4 | Φ9 |


G3

| TYPE | INLET | OUTLET |
|---|---|---|
| | A | a |
| KAP1..0.8 ～ KAP1..8.0 | G3/8 | Φ9 |


G4

| TYPE | INLET | OUTLET |
|---|---|---|
| | A | a |
| KAP1..0.8 ～ KAP1..8.0 | 3/8NPT | Φ9 |

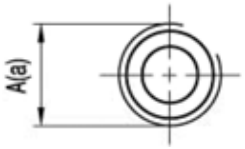


L1

| TYPE | INLET | OUTLET |
|---|---|---|
| | A | a |
| KAP1..0.8 ～ KAP1..8.0 | G3/8 | G1/4 |

# KAP1

## PORTS

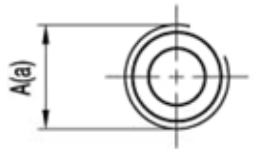


L2

| TYPE | INLET | OUTLET |
|---|---|---|
| | A | a |
| KAP1..0.8 ～ KAP1..8.0 | G3/8 | G3/8 |

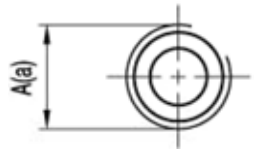


M1

| TYPE | INLET | OUTLET |
|---|---|---|
| | A | a |
| KAP1..0.8 ～ KAP1..8.0 | M18×1.5 | M18×1.5 |

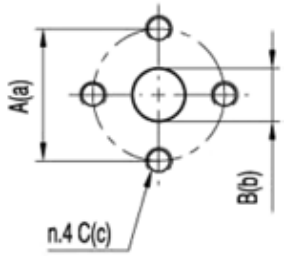


F1

| TYPE | INLET | | | OUTLET | | |
|---|---|---|---|---|---|---|
| | A | B | C | a | b | c |
| KAP1..2.1 ～ KAP1..8.0 | 30 | 12 | M6 | 30 | 12 | M6 |

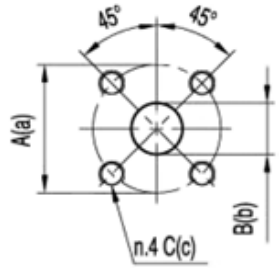


F40

| TYPE | INLET | | | OUTLET | | |
|---|---|---|---|---|---|---|
| | A | B | C | a | b | c |
| KAP1..0.8 ～ KAP1..8.0 | 30 | 12 | M6 | 30 | 12 | M6 |

# KAP1

## OPTIONS

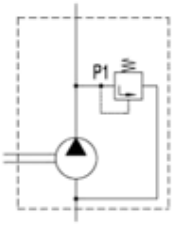


X0

| DISCRIPTION |
| --- |
| Pressure relief valve with internal drain ; setting pressure between 5 and 230 bar . |

# KAP1.5[KGP1.5]

## HOW TO ORDER

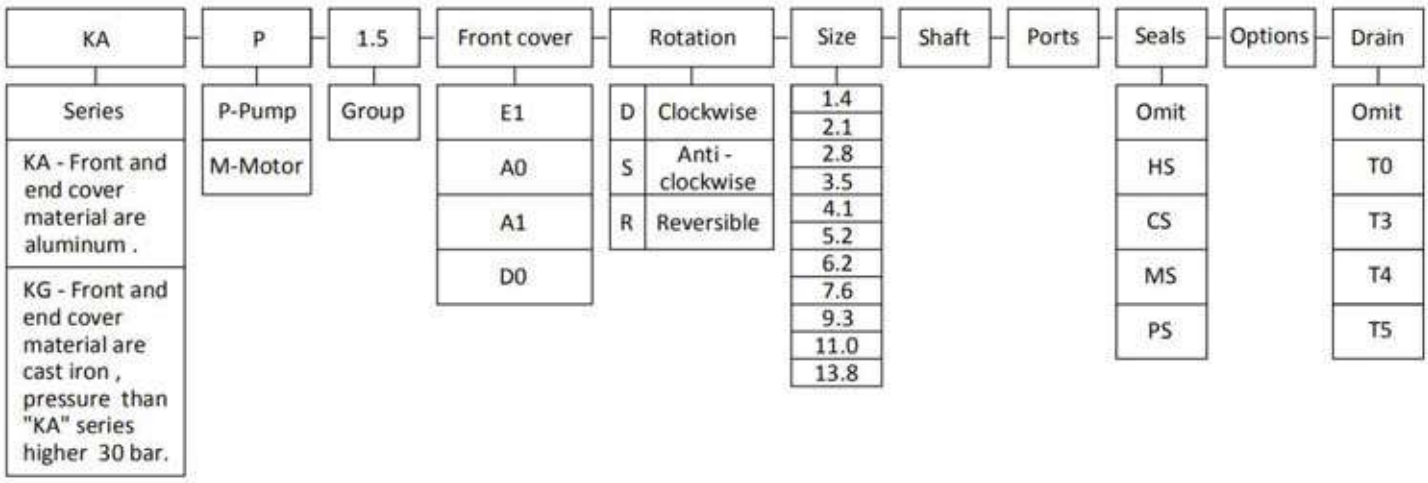


### Seals

Omit - Range between -10℃and +80℃， inlet pressure up to max. 3 bar absolute ( standard seal ) .

HS - Version suitable for fluid at hi-temperatures , range between -10℃and +120℃ .

CS - Version suitable for fluid at low-temperatures , range between -40℃and +80℃ .

MS - Version suitable for inlet pressure up to max. 3 and 6 bar absolute .

PS - Version suitable for inlet pressure up to max. 3 and 10 bar absolute .

### Drain

Omit - Have no drain .

T0 - Internal drain .

T3 - External drain G1/4 .

T4 - External drain 7/16-20 UNF .

T5 - External drain 9/16-18 UNF .

## Examples

KAP1.5A0-D-5.2P2L4 = KA series , 1.5 group pump , A0 front cover , Clockwise , 5.2 cc/rev , P2 shaft , L4 ports , standard seal , side inlet and side outlet .

# KAP1.5E1

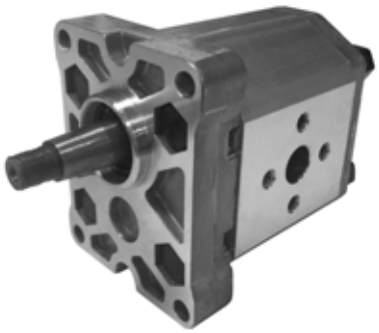

★ Use axial gap automatic compensation mechanism.

★ High sustained working pressure and long service life .

★ Anti fouling ability is strong and suitable for power units,machines and other kinds Of hydraulic systems .

**OUTLET** **INLET**

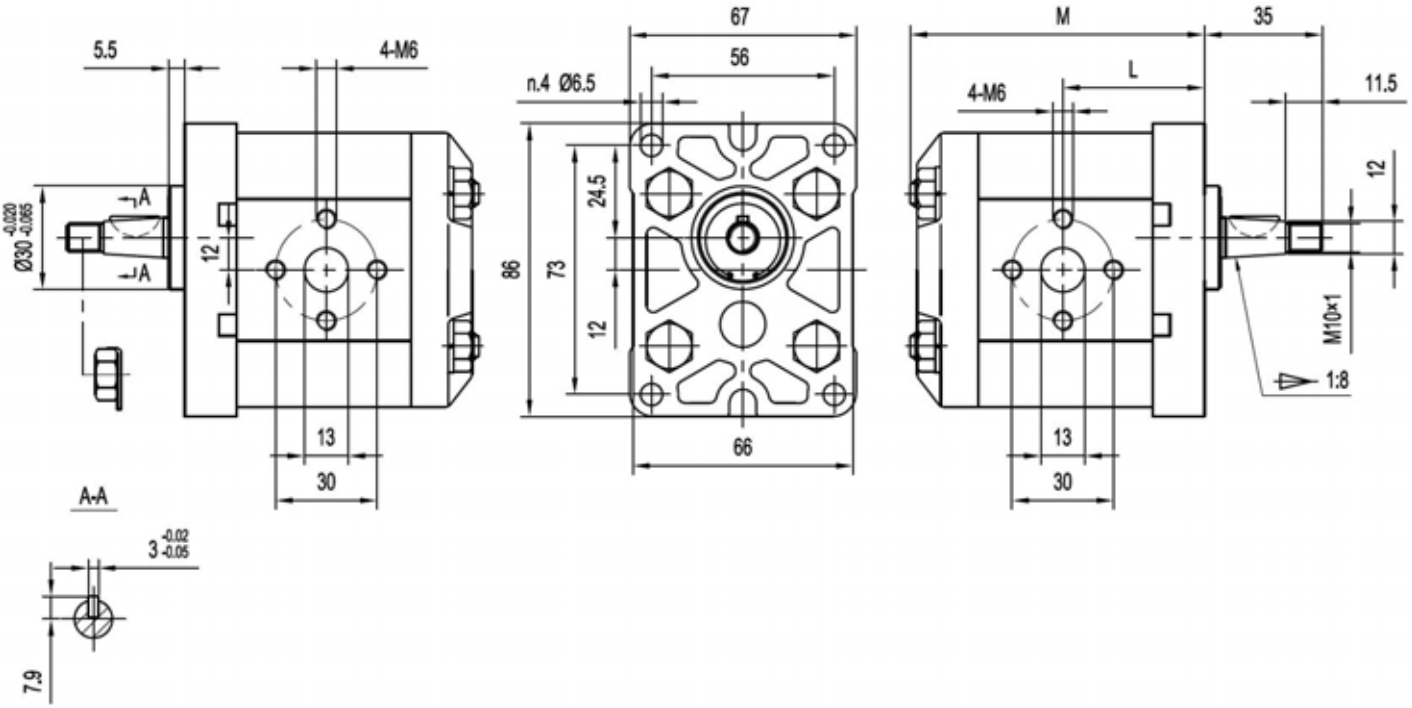


| Type | Displacement | Max. pressure | | | Max. speed | Min. speed | Dimensions | |
|---|---|---|---|---|---|---|---|---|
| | | P1 | P2 | P3 | | | L | M |
| | (cm /rev) | bar | bar | bar | (r/min) | (r/min) | mm | mm |
| KAP1.5E1-D-1.4 | 1.4 | 200 | 225 | 250 | 6000 | 800 | 40 | 82.5 |
| KAP1.5E1-D-2.1 | 2.1 | 200 | 225 | 250 | 6000 | 800 | 41 | 84.5 |
| KAP1.5E1-D-2.8 | 2.8 | 200 | 225 | 250 | 5000 | 800 | 42 | 86.5 |
| KAP1.5E1-D-3.5 | 3.5 | 200 | 225 | 250 | 5000 | 800 | 43 | 88.5 |
| KAP1.5E1-D-4.1 | 4.1 | 200 | 225 | 250 | 4000 | 800 | 44 | 90.5 |
| KAP1.5E1-D-5.2 | 5.2 | 200 | 225 | 250 | 4000 | 800 | 45.5 | 93.5 |
| KAP1.5E1-D-6.2 | 6.2 | 200 | 225 | 250 | 3800 | 800 | 47 | 96.5 |
| KAP1.5E1-D-7.6 | 7.6 | 200 | 215 | 230 | 3200 | 600 | 49 | 100.5 |
| KAP1.5E1-D-9.3 | 9.3 | 180 | 195 | 210 | 2600 | 600 | 51.5 | 105.5 |
| KAP1.5E1-D-11.0 | 11.0 | 170 | 185 | 200 | 2200 | 600 | 54 | 110.5 |
| KAP1.5E1-D-13.8 | 13.8 | 150 | 165 | 180 | 1800 | 600 | 58 | 118.5 |

# KAP1.5A0

- ★ Use axial gap automatic compensation mechanism.
- ★ High sustained working pressure and long service life .
- ★ Anti fouling ability is strong and suitable for power units,machines and other kinds 0f hydraulic systems .

**OUTLET** **INLET**

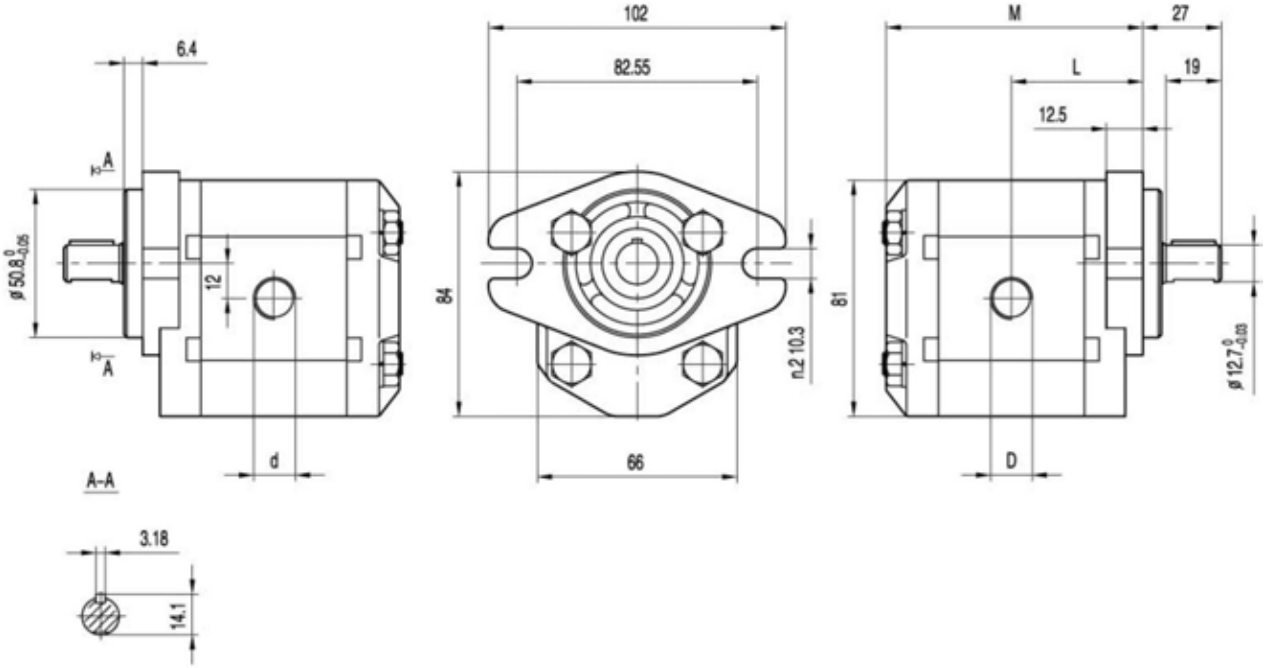


| Type | Displacement | Max. pressure | | | Max. | Min. | Dimensions | | | |
|---|---|---|---|---|---|---|---|---|---|---|
| | | P1 | P2 | P3 | speed | speed | L | M | D | d |
| | ($cm^3$/rev) | bar | bar | bar | (r/min) | (r/min) | mm | mm | | |
| KAP1.5A0-D-1.4 | 1.4 | 200 | 225 | 250 | 6000 | 800 | 42 | 82.5 | G1/2 | G3/8 |
| KAP1.5A0-D-2.1 | 2.1 | 200 | 225 | 250 | 6000 | 800 | 43 | 84.5 | G1/2 | G3/8 |
| KAP1.5A0-D-2.8 | 2.8 | 200 | 225 | 250 | 5000 | 800 | 44 | 86.5 | G1/2 | G3/8 |
| KAP1.5A0-D-3.5 | 3.5 | 200 | 225 | 250 | 5000 | 800 | 45 | 88.5 | G1/2 | G3/8 |
| KAP1.5A0-D-4.1 | 4.1 | 200 | 225 | 250 | 4000 | 800 | 46 | 90.5 | G1/2 | G1/2 |
| KAP1.5A0-D-5.2 | 5.2 | 200 | 225 | 250 | 4000 | 800 | 47.5 | 93.5 | G1/2 | G1/2 |
| KAP1.5A0-D-6.2 | 6.2 | 200 | 225 | 250 | 3800 | 800 | 49 | 96.5 | G1/2 | G1/2 |
| KAP1.5A0-D-7.6 | 7.6 | 200 | 215 | 230 | 3200 | 600 | 51 | 100.5 | G1/2 | G1/2 |
| KAP1.5A0-D-9.3 | 9.3 | 180 | 195 | 210 | 2600 | 600 | 53.5 | 105.5 | G1/2 | G1/2 |
| KAP1.5A0-D-11.0 | 11.0 | 170 | 185 | 200 | 2200 | 600 | 56 | 110.5 | G1/2 | G1/2 |
| KAP1.5A0-D-13.8 | 13.8 | 150 | 165 | 180 | 1800 | 600 | 60 | 118.5 | G1/2 | G1/2 |

# KGP1.5D0

★ Use axial gap automatic compensation mechanism.

★ High sustained working pressure and long service life .

★ Anti fouling ability is strong and suitable for power units,machines and other kinds Of hydraulic systems .

**OUTLET** **INLET**

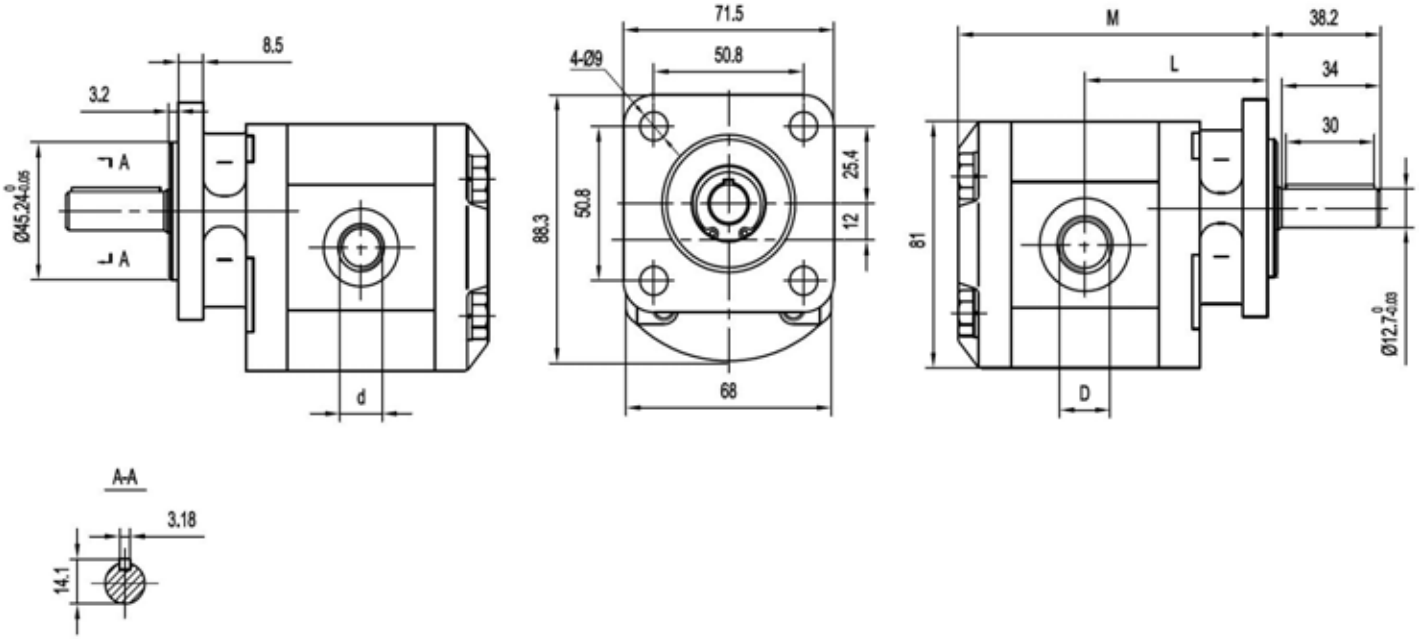


| Type | Displacement | Max. pressure | | | Max. | Min. | Dimensions | | | |
|---|---|---|---|---|---|---|---|---|---|---|
| | | P1 | P2 | P3 | speed | speed | L | M | D | d |
| | ($cm^3$/rev) | bar | bar | bar | (r/min) | (r/min) | mm | mm | | |
| KAP1.5D0-D-1.4 | 1.4 | 200 | 225 | 250 | 6000 | 800 | 59 | 98 | 3/4-16UNF | 9/16-18UNF |
| KAP1.5D0-D-2.1 | 2.1 | 200 | 225 | 250 | 6000 | 800 | 60 | 100 | 3/4-16UNF | 9/16-18UNF |
| KAP1.5D0-D-2.8 | 2.8 | 200 | 225 | 250 | 5000 | 800 | 61 | 102 | 3/4-16UNF | 9/16-18UNF |
| KAP1.5D0-D-3.5 | 3.5 | 200 | 225 | 250 | 5000 | 800 | 62 | 104 | 3/4-16UNF | 9/16-18UNF |
| KAP1.5D0-D-4.1 | 4.1 | 200 | 225 | 250 | 4000 | 800 | 63 | 106 | 3/4-16UNF | 9/16-18UNF |
| KAP1.5D0-D-5.2 | 5.2 | 200 | 225 | 250 | 4000 | 800 | 64.5 | 109 | 3/4-16UNF | 9/16-18UNF |
| KAP1.5D0-D-6.2 | 6.2 | 200 | 225 | 250 | 3800 | 800 | 66 | 112 | 3/4-16UNF | 9/16-18UNF |
| KAP1.5D0-D-7.6 | 7.6 | 200 | 215 | 230 | 3200 | 600 | 68 | 116 | 7/8-14UNF | 3/4-16UNF |
| KAP1.5D0-D-9.3 | 9.3 | 180 | 195 | 210 | 2600 | 600 | 70.5 | 121 | 7/8-14UNF | 3/4-16UNF |
| KAP1.5D0-D-11.0 | 11.0 | 170 | 185 | 200 | 2200 | 600 | 73 | 126 | 7/8-14UNF | 3/4-16UNF |
| KAP1.5D0-D-13.8 | 13.8 | 150 | 165 | 180 | 1800 | 600 | 77 | 134 | 7/8-14UNF | 3/4-16UNF |

# KGM1.5A1

★ Use axial gap automatic compensation mechanism.

★ High sustained working pressure and long service life .

★ Anti fouling ability is strong and suitable for power units,machines and other kinds Of hydraulic systems .

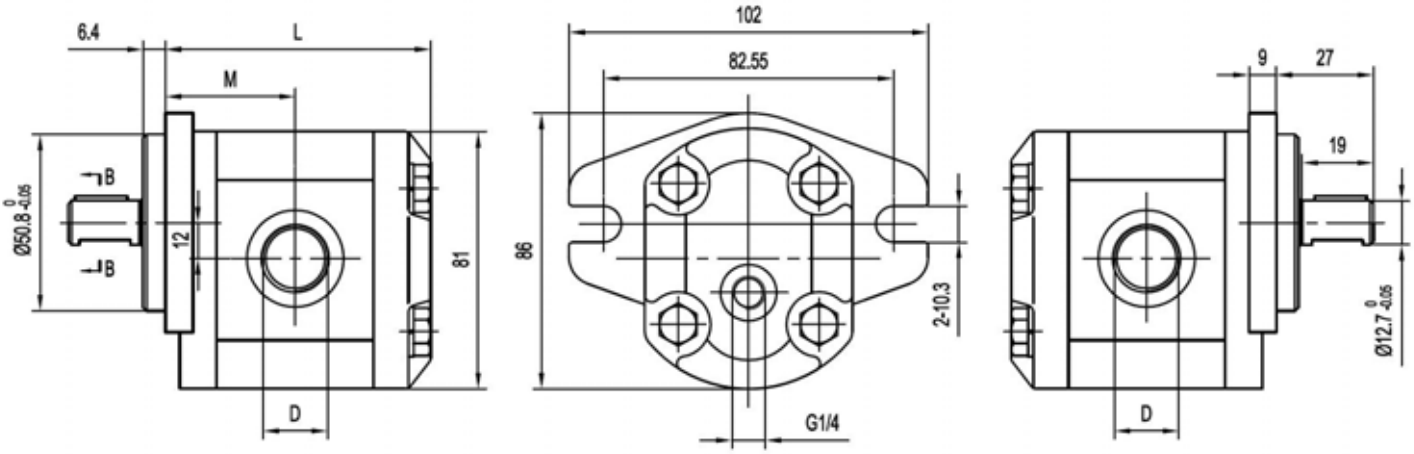


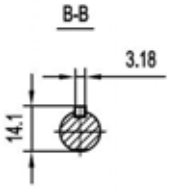


| Type | Displacement | Max. pressure | | | Max. | Min. | Dimensions | | |
|---|---|---|---|---|---|---|---|---|---|
| | | P1 | P2 | P3 | speed | speed | L | M | D |
| | ($cm^3$/rev) | bar | bar | bar | (r/min) | (r/min) | mm | mm | |
| KGM1.5A1-R-1.4-T3 | 1.4 | 200 | 225 | 250 | 6000 | 800 | 42 | 82.5 | 3/4-16UNF |
| KGM1.5A1-R-2.1-T3 | 2.1 | 200 | 225 | 250 | 6000 | 800 | 43 | 84.5 | 3/4-16UNF |
| KGM1.5A1-R-2.8-T3 | 2.8 | 200 | 225 | 250 | 5000 | 800 | 44 | 86.5 | 3/4-16UNF |
| KGM1.5A1-R-3.5-T3 | 3.5 | 200 | 225 | 250 | 5000 | 800 | 45 | 88.5 | 3/4-16UNF |
| KGM1.5A1-R-4.1-T3 | 4.1 | 200 | 225 | 250 | 4000 | 800 | 46 | 90.5 | 3/4-16UNF |
| KGM1.5A1-R-5.2-T3 | 5.2 | 200 | 225 | 250 | 4000 | 800 | 47.5 | 93.5 | 3/4-16UNF |
| KGM1.5A1-R-6.2-T3 | 6.2 | 200 | 225 | 250 | 3800 | 800 | 49 | 96.5 | 3/4-16UNF |
| KGM1.5A1-R-7.6-T3 | 7.6 | 200 | 215 | 230 | 3200 | 600 | 51 | 100.5 | 7/8-14UNF |
| KGM1.5A1-R-9.3-T3 | 9.3 | 180 | 195 | 210 | 2600 | 600 | 53.5 | 105.5 | 7/8-14UNF |
| KGM1.5A1-R-11.0-T3 | 11.0 | 170 | 185 | 200 | 2200 | 600 | 56 | 110.5 | 7/8-14UNF |
| KGM1.5A1-R-13.8-T3 | 13.8 | 150 | 165 | 180 | 1800 | 600 | 60 | 118.5 | 7/8-14UNF |

# KAP1.5[KGP1.5]

FRONT COVER

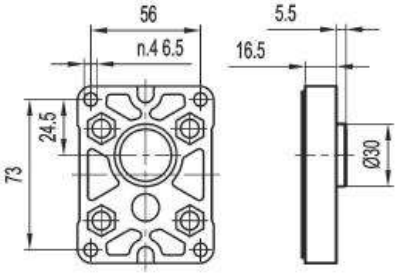


E1

SHAFTS

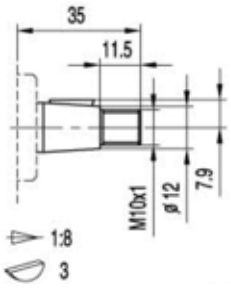


Z3

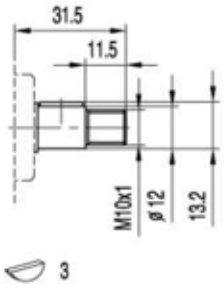


P1

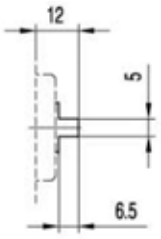


B4

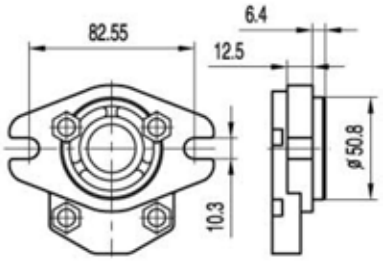


A0

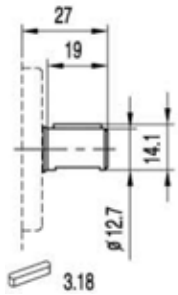


P2

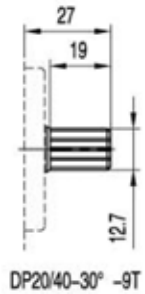


J0

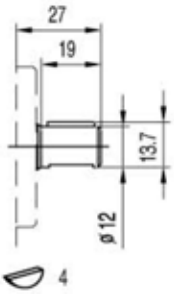


P3

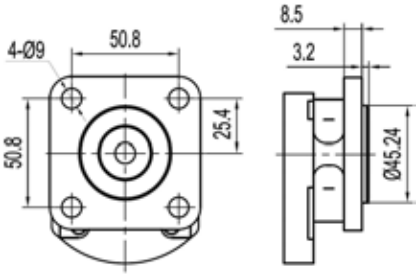


D0

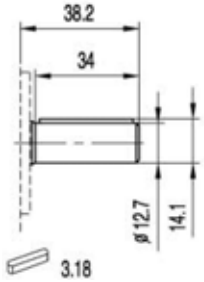


P4

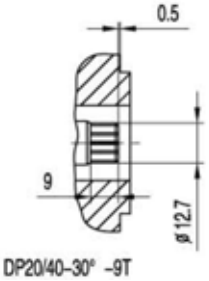


J1

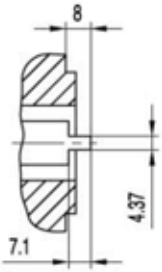


B5

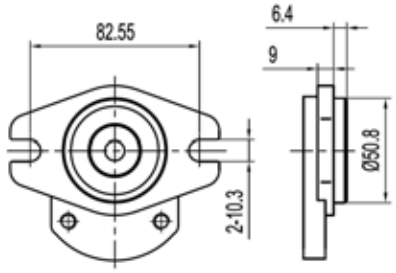


A1

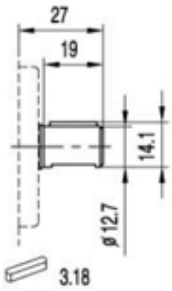


P2

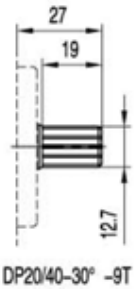


J0

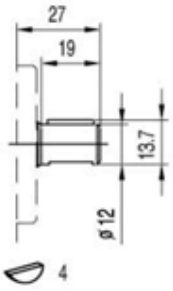


P3

# KAP1.5[KGP1.5]

## PORTS

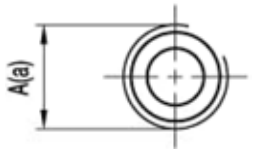


L2/L3/L4/L5

| TYPE | CODE | INLET | OUTLET |
|---|---|---|---|
| | | A | a |
| KAP1.5..1.4 ～ KAP1.5..3.5 | L2 | G3/8 | G3/8 |
| KAP1.5..1.4 ～ KAP1.5..3.5 | L3 | G1/2 | G3/8 |
| KAP1.5..4.1 ～ KAP1.5..13.8 | L4 | G1/2 | G1/2 |
| KAP1.5..4.1 ～ KAP1.5..13.8 | L5 | G3/4 | G1/2 |

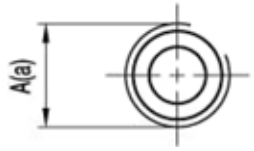


N0/N1/N2/N3

| TYPE | CODE | INLET | OUTLET |
|---|---|---|---|
| | | A | a |
| KAP1.5..1.4 ～ KAP1.5..6.2 | N0 | PT3/8 | PT3/8 |
| KAP1.5..1.4 ～ KAP1.5..6.2 | N1 | PT1/2 | PT3/8 |
| KAP1.5..1.4 ～ KAP1.5..13.8 | N2 | PT1/2 | PT1/2 |
| KAP1.5..7.6 ～ KAP1.5..13.8 | N3 | PT3/4 | PT1/2 |

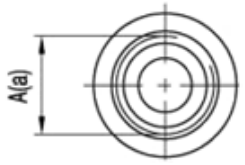


U0/U1/U2/U3

| TYPE | CODE | INLET | OUTLET |
|---|---|---|---|
| | | A | a |
| KAP1.5..1.4 ～ KAP1.5..6.2 | U0 | 3/4-16UNF | 9/16-18UNF |
| KAP1.5..1.4 ～ KAP1.5..6.2 | U1 | 3/4-16UNF | 3/4-16UNF |
| KAP1.5..7.6 ～ KAP1.5..13.8 | U2 | 7/8-14UNF | 3/4-16UNF |
| KAP1.5..7.6 ～ KAP1.5..13.8 | U3 | 7/8-14UNF | 7/8-14UNF |

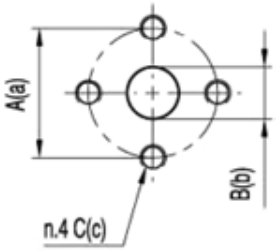


F2

| TYPE | INLET | | | OUTLET | | |
|---|---|---|---|---|---|---|
| | A | B | C | a | b | c |
| KAP1.5..1.4 ～ KAP1.5..13.8 | 30 | 13 | M6 | 30 | 13 | M6 |

# KAP1.6

## HOW TO ORDER

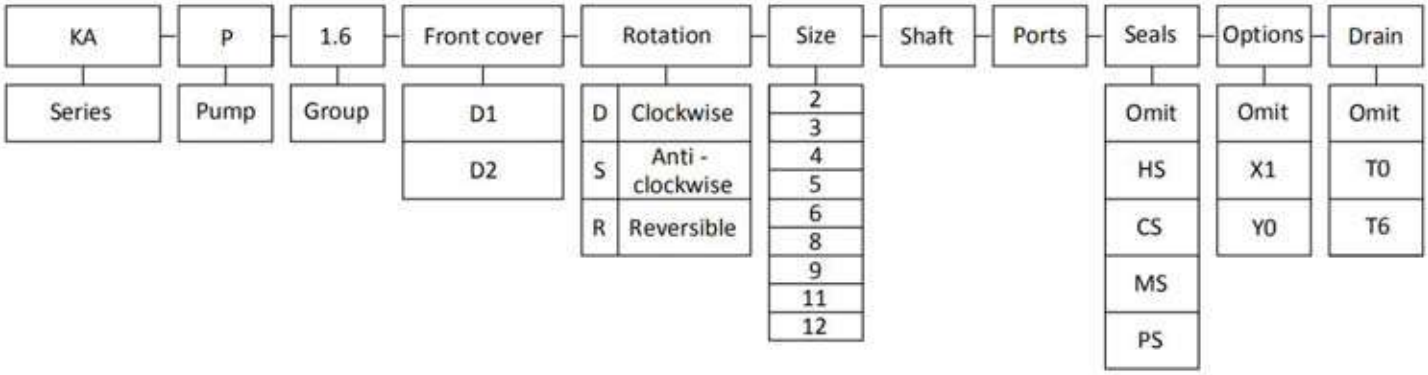


### Seals

Omit - Range between -10℃and +80℃， inlet pressure up to max. 3 bar absolute ( standard seal ) .

HS - Version suitable for fluid at hi-temperatures , range between -10℃and +120℃ .

CS - Version suitable for fluid at low-temperatures , range between -40℃and +80℃ .

MS - Version suitable for inlet pressure up to max. 3 and 6 bar absolute .

PS - Version suitable for inlet pressure up to max. 3 and 10 bar absolute .

### Options

Omit - have no valve .

X1 - Pressure relief valve with internal drain .

Y0 - Pressure relief valve with external drain .

### Drain

Omit - Have no drain .

T0 - Internal drain .

T6 - External drain PT1/4 .

## Examples

KAP1.6D1-S-8P5F19 = KA series , 1.6 group pump , D1 front cover , Anti-clockwise , 8 cc/rev , P5 shaft , F19 ports , standard seal , side inlet and side outlet .

# KAP1.6D1

★ Use axial gap automatic compensation mechanism.

★ High sustained working pressure and long service life .

★ Anti fouling ability is strong and suitable for power units,machines and other kinds Of hydraulic systems .

**INLET** **OUTLET**

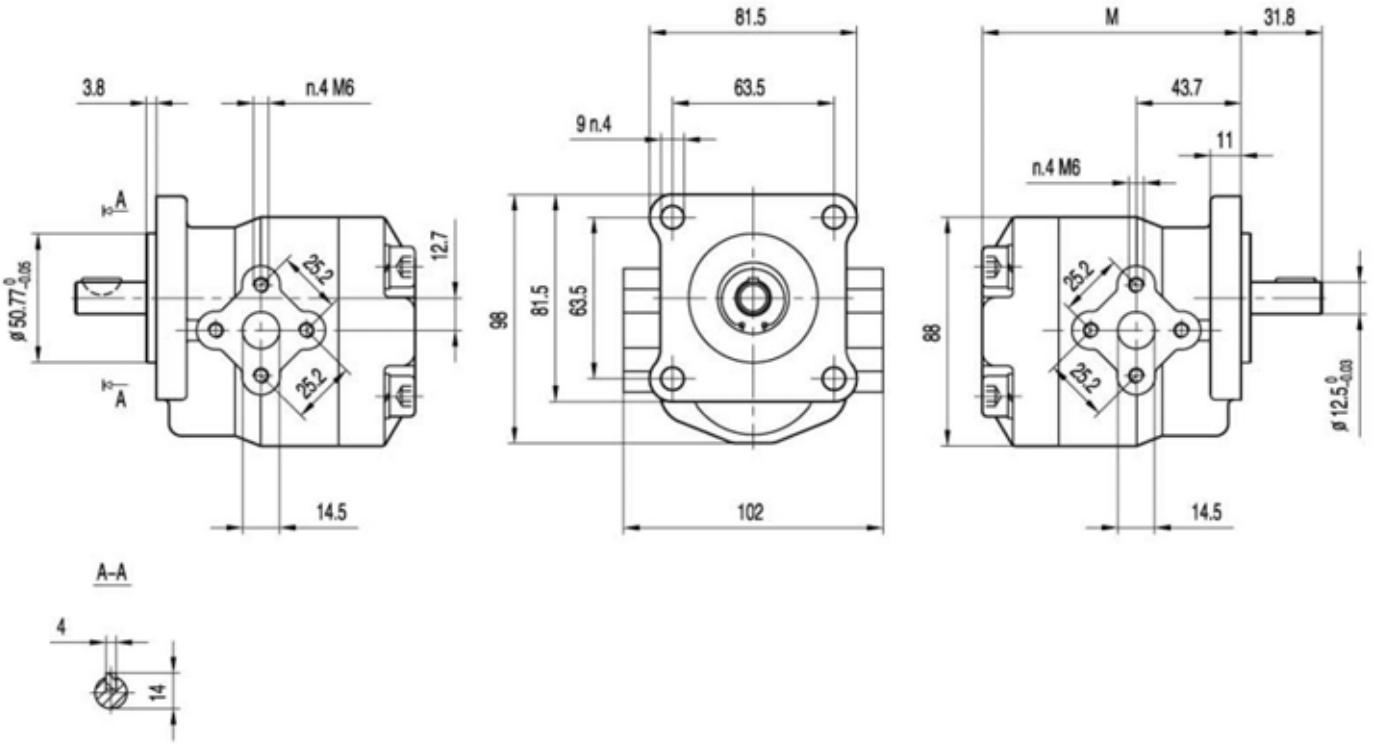


| Type | Displacement | Max. pressure | | | Max. speed | Min. speed | Dimensions |
|---|---|---|---|---|---|---|---|
| | | P1 | P2 | P3 | | | M |
| | ($cm^3$/rev) | bar | bar | bar | (r/min) | (r/min) | mm |
| KAP1.6D1-S-2 | 2 | 200 | 225 | 250 | 5000 | 900 | 96.7 |
| KAP1.6D1-S-3 | 3 | 200 | 225 | 250 | 5000 | 850 | 96.7 |
| KAP1.6D1-S-4 | 4 | 200 | 225 | 250 | 4500 | 800 | 96.7 |
| KAP1.6D1-S-5 | 5 | 200 | 225 | 250 | 4000 | 800 | 96.7 |
| KAP1.6D1-S-6 | 6 | 200 | 225 | 250 | 3500 | 700 | 99.7 |
| KAP1.6D1-S-8 | 8 | 200 | 225 | 250 | 3000 | 600 | 99.7 |
| KAP1.6D1-S-9 | 9 | 180 | 200 | 220 | 2500 | 550 | 102.7 |
| KAP1.6D1-S-11 | 11 | 180 | 200 | 220 | 2000 | 500 | 105.7 |
| KAP1.6D1-S-12 | 12 | 180 | 200 | 220 | 2000 | 500 | 105.7 |

# KAP1.6D2

★ Use axial gap automatic compensation mechanism.

★ High sustained working pressure and long service life .

★ Anti fouling ability is strong and suitable for power units,machines and other kinds 0f hydraulic systems .

**INLET** **OUTLET**

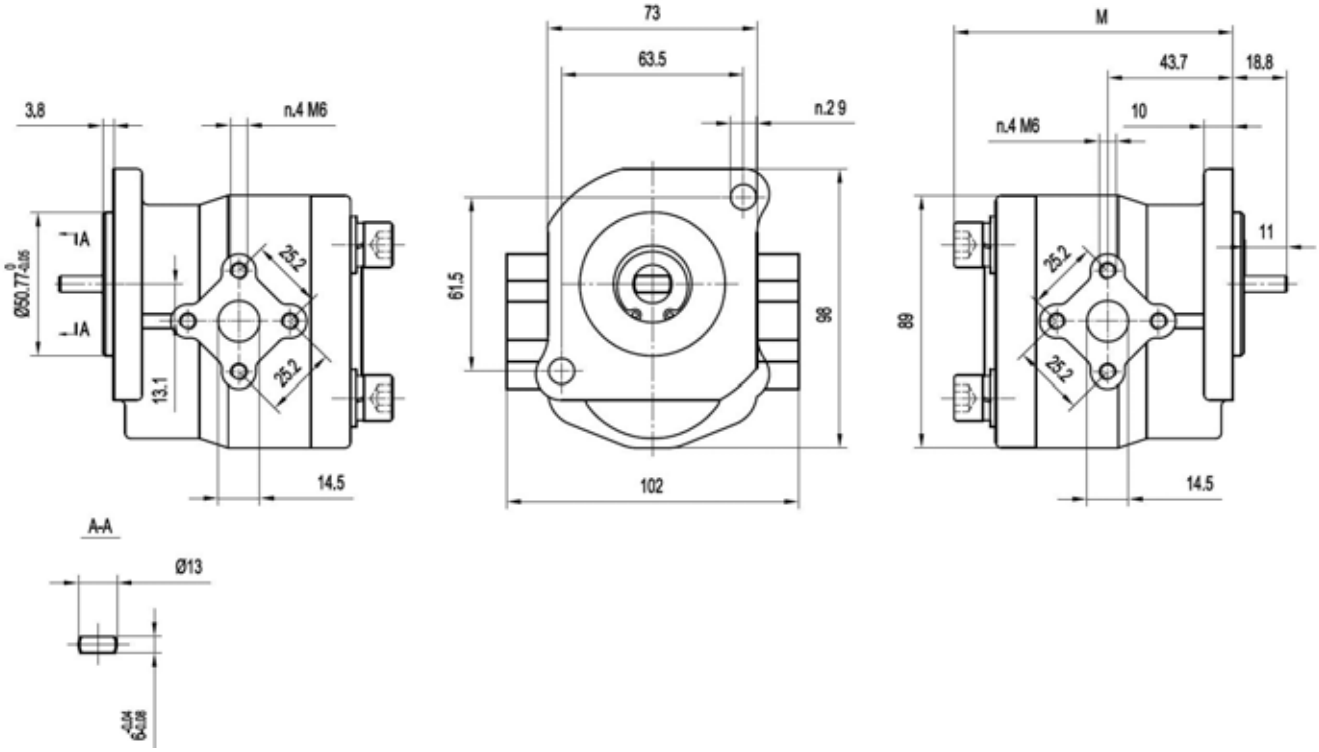


| Type | Displacement | Max. pressure | | | Max. speed | Min. speed | Dimensions |
|---|---|---|---|---|---|---|---|
| | | P1 | P2 | P3 | | | M |
| | ($cm^3$/rev) | bar | bar | bar | (r/min) | (r/min) | mm |
| KAP1.6D2-S-2 | 2 | 200 | 225 | 250 | 5000 | 900 | 96.7 |
| KAP1.6D2-S-3 | 3 | 200 | 225 | 250 | 5000 | 850 | 96.7 |
| KAP1.6D2-S-4 | 4 | 200 | 225 | 250 | 4500 | 800 | 96.7 |
| KAP1.6D2-S-5 | 5 | 200 | 225 | 250 | 4000 | 800 | 96.7 |
| KAP1.6D2-S-6 | 6 | 200 | 225 | 250 | 3500 | 700 | 99.7 |
| KAP1.6D2-S-8 | 8 | 200 | 225 | 250 | 3000 | 600 | 99.7 |
| KAP1.6D2-S-9 | 9 | 180 | 200 | 220 | 2500 | 550 | 102.7 |
| KAP1.6D2-S-11 | 11 | 180 | 200 | 220 | 2000 | 500 | 105.7 |
| KAP1.6D2-S-12 | 12 | 180 | 200 | 220 | 2000 | 500 | 105.7 |

# KAP1.6D1-Y0T6

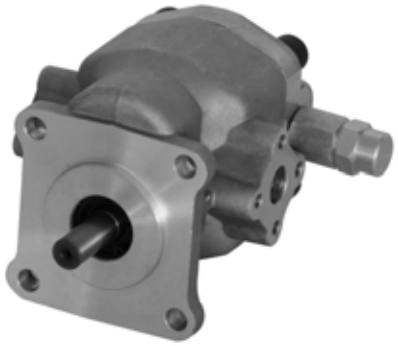

★ Use axial gap automatic compensation mechanism.

★ High sustained working pressure and long service life .

★ Anti fouling ability is strong and suitable for power units,machines and other kinds Of hydraulic systems .

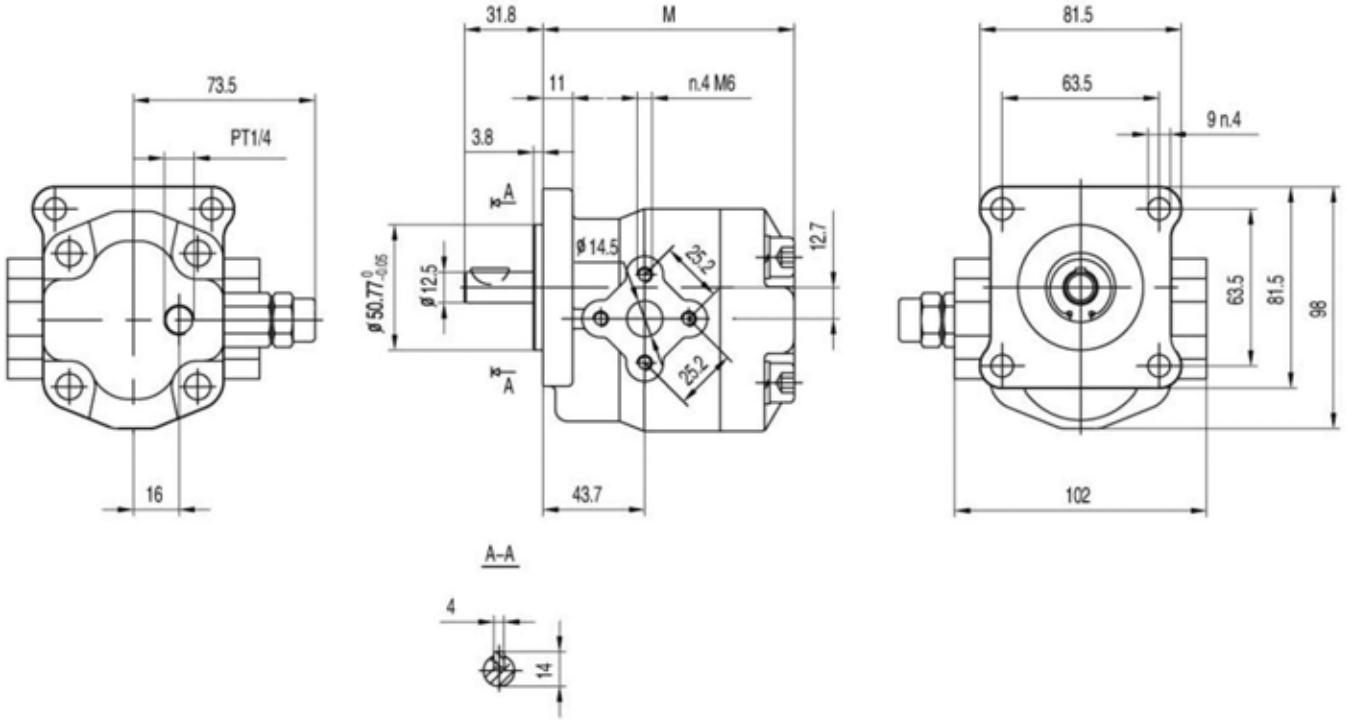


| Type | Displacement | Max. pressure | | | Max. speed | Min. speed | Dimensions |
|---|---|---|---|---|---|---|---|
| | | P1 | P2 | P3 | | | M |
| | ($cm^3$/rev) | bar | bar | bar | (r/min) | (r/min) | mm |
| KAP1.6D1-D-2-Y0T6 | 2 | 200 | 225 | 250 | 5000 | 900 | 96.7 |
| KAP1.6D1-D-3-Y0T6 | 3 | 200 | 225 | 250 | 5000 | 850 | 96.7 |
| KAP1.6D1-D-4-Y0T6 | 4 | 200 | 225 | 250 | 4500 | 800 | 96.7 |
| KAP1.6D1-D-5-Y0T6 | 5 | 200 | 225 | 250 | 4000 | 800 | 96.7 |
| KAP1.6D1-D-6-Y0T6 | 6 | 200 | 225 | 250 | 3500 | 700 | 99.7 |
| KAP1.6D1-D-8-Y0T6 | 8 | 200 | 225 | 250 | 3000 | 600 | 99.7 |
| KAP1.6D1-D-9-Y0T6 | 9 | 180 | 200 | 220 | 2500 | 550 | 102.7 |
| KAP1.6D1-D-11-Y0T6 | 11 | 180 | 200 | 220 | 2000 | 500 | 105.7 |
| KAP1.6D1-D-12-Y0T6 | 12 | 180 | 200 | 220 | 2000 | 500 | 105.7 |

# KAP1.6

## FRONT COVER

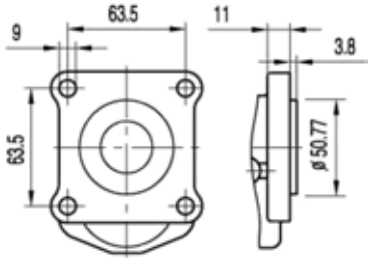


D1

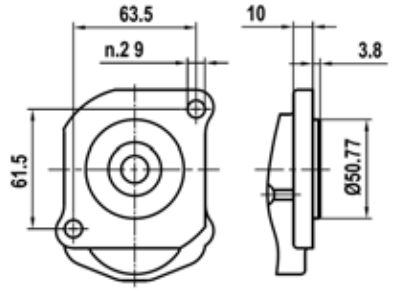


D2

## SHAFTS

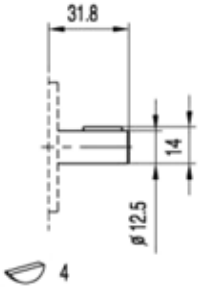


P5

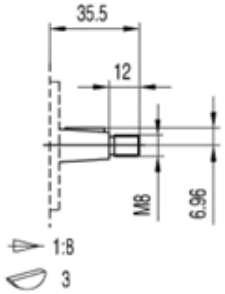


Z4

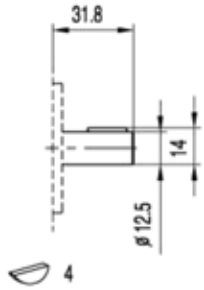


P5

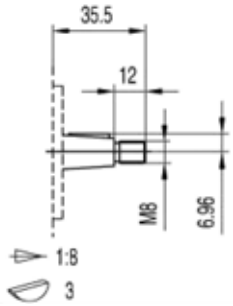


Z4

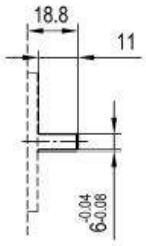


B8

## PORTS

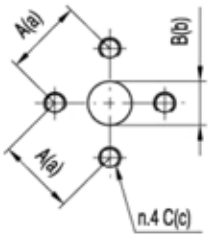


F19

| TYPE | INLET | | | OUTLET | | |
|---|---|---|---|---|---|---|
| | A | B | C | a | b | c |
| KAP1.6..2 ～ KAP1.6..12 | 25.2 | 14.5 | M6 | 25.2 | 14.5 | M6 |

# KAP1.6

## OPTIONS

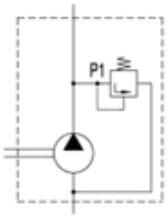


X1

| DISCRIPTION |
| --- |
| Pressure relief valve with internal drain ; setting pressure between 5 and 230 bar . |

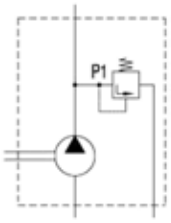


Y0

| DISCRIPTION |
| --- |
| Pressure relief valve with external drain ; setting pressure between 5 and 230 bar . |

# KGP2[KAP2]

## HOW TO ORDER

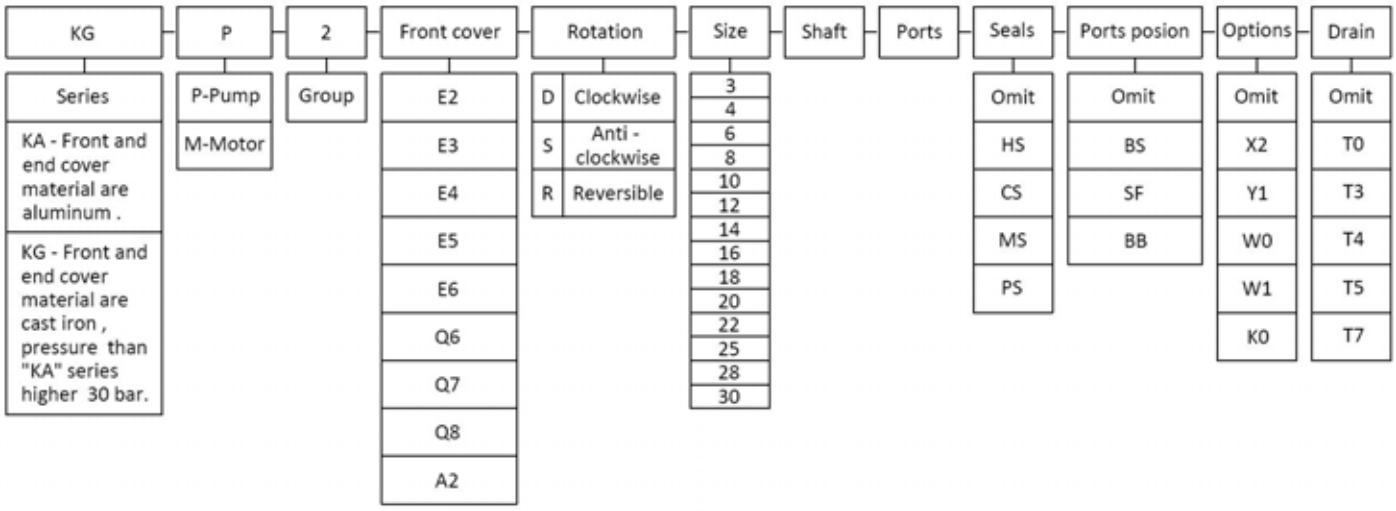


### Seals

Omit - Range between -10℃and +80℃， inlet pressure up to max. 3 bar absolute ( standard seal ) .

HS - Version suitable for fluid at hi-temperatures , range between -10℃and +120℃ .

CS - Version suitable for fluid at low-temperatures , range between -40℃and +80℃ .

MS - Version suitable for inlet pressure up to max. 3 and 6 bar absolute .

PS - Version suitable for inlet pressure up to max. 3 and 10 bar absolute .

### Ports position

Omit - Side inlet and side outlet .

BS - Back inlet and side outlet .

SF - Side inlet and front outlet .

BB - Back inlet and back outlet

### Options

Omit - Have no valves .

X2 - Pressure valve with internal drain .

Y1 - Pressure valve with external drain.

W0 - Flow control vale with pressure valve .

W1 - Flow control vale with pressure valve .

K0 - Flow control vale .

### Drain

Omit - Have no drain .

T0 - Internal drain .

T3 - External drain G1/4 .

T4 - External drain 7/16-20 UNF .

T5 - External drain 9/16-18 UNF .

T7 - External drain M12×1.5 .

## Examples

KGP2E2-D-12Z5F9 = KG series , 2 group pump , E2 front cover , clockwise , 12 cc/rev , Z5 shaft , F9 ports , standard seal , side inlet and side outlet .

# KGP2E2

★ Use axial gap automatic compensation mechanism.

★ High sustained working pressure and long service life .

★ Anti fouling ability is strong and suitable for tractors , power units , machines and other kinds 0f hydraulic systems .

**OUTLET** **INLET**

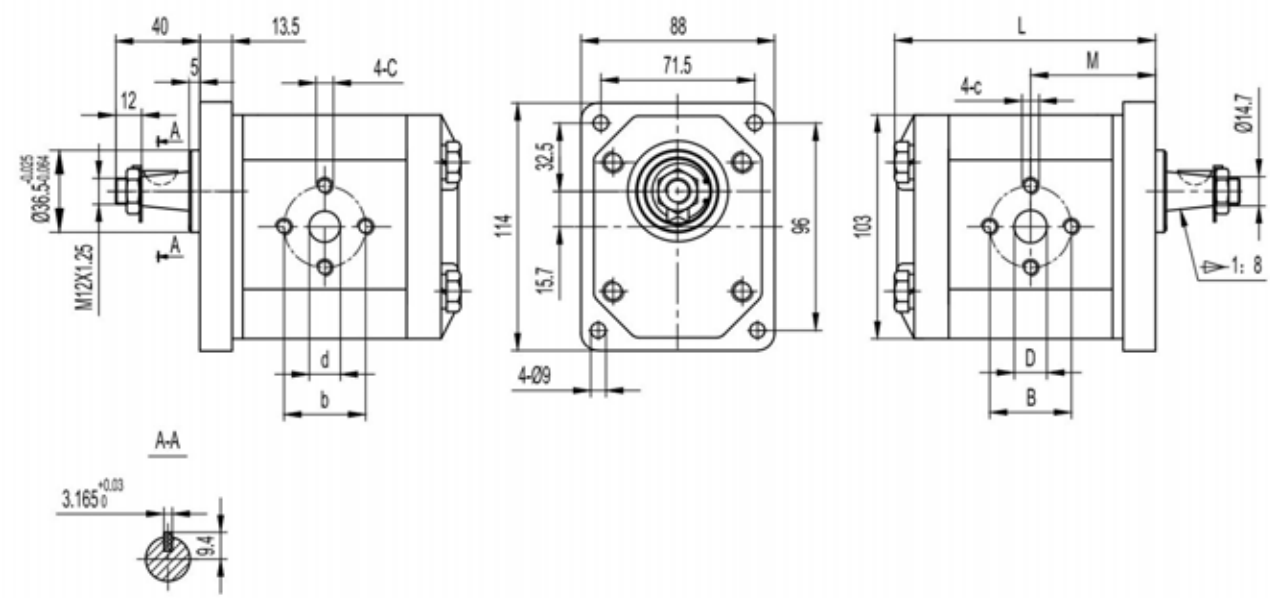


| Type | Displacement | Max. pressure | | | Max. speed | Min. speed | Dimensions | | | | | | | |
|---|---|---|---|---|---|---|---|---|---|---|---|---|---|---|
| | | P1 | P2 | P3 | | | M | L | B | D | b | d | C | c |
| | ($cm^3$/rev) | bar | bar | bar | (r/min) | (r/min) | mm | | | | | | | |
| KGP2E2-D-3 | 3 | 200 | 225 | 250 | 4000 | 800 | 43.6 | 91.1 | 30 | 13 | 30 | 13 | M6 | M6 |
| KGP2E2-D-4 | 4 | 200 | 225 | 250 | 4000 | 600 | 44.4 | 92.7 | 30 | 13 | 30 | 13 | M6 | M6 |
| KGP2E2-D-6 | 6 | 200 | 225 | 250 | 4000 | 600 | 46 | 96 | 30 | 13 | 30 | 13 | M6 | M6 |
| KGP2E2-D-8 | 8 | 200 | 225 | 250 | 3500 | 500 | 47.7 | 99.3 | 30 | 13 | 30 | 13 | M6 | M6 |
| KGP2E2-D-10 | 10 | 200 | 225 | 250 | 3000 | 500 | 49.3 | 102.6 | 40 | 20 | 30 | 13 | M8 | M6 |
| KGP2E2-D-12 | 12 | 200 | 225 | 250 | 3000 | 500 | 51 | 105.9 | 40 | 20 | 30 | 13 | M8 | M6 |
| KGP2E2-D-14 | 14 | 200 | 225 | 250 | 3000 | 500 | 52.7 | 109.3 | 40 | 20 | 30 | 13 | M8 | M6 |
| KGP2E2-D-16 | 16 | 200 | 225 | 250 | 3000 | 500 | 54.4 | 112.7 | 40 | 20 | 30 | 13 | M8 | M6 |
| KGP2E2-D-18 | 18 | 200 | 225 | 250 | 3000 | 500 | 56 | 116 | 40 | 20 | 30 | 13 | M8 | M6 |
| KGP2E2-D-20 | 20 | 200 | 225 | 250 | 3000 | 400 | 57.7 | 119.3 | 40 | 20 | 30 | 13 | M8 | M6 |
| KGP2E2-D-22 | 22 | 200 | 225 | 250 | 3000 | 400 | 59.3 | 122.6 | 40 | 20 | 30 | 13 | M8 | M6 |
| KGP2E2-D-25 | 25 | 200 | 215 | 230 | 3000 | 400 | 61.8 | 127.6 | 40 | 22 | 30 | 13 | M8 | M6 |
| KGP2E2-D-28 | 28 | 180 | 190 | 200 | 2500 | 400 | 64.3 | 132.6 | 40 | 22 | 30 | 13 | M8 | M6 |
| KGP2E2-D-30 | 30 | 160 | 170 | 180 | 2500 | 400 | 66 | 135.9 | 40 | 22 | 30 | 13 | M8 | M6 |

# KGP2E3

★ Use axial gap automatic compensation mechanism.

★ High sustained working pressure and long service life .

★ Anti fouling ability is strong and suitable for tractors , power units , machines and other kinds Of hydraulic systems .

**OUTLET** **INLET**

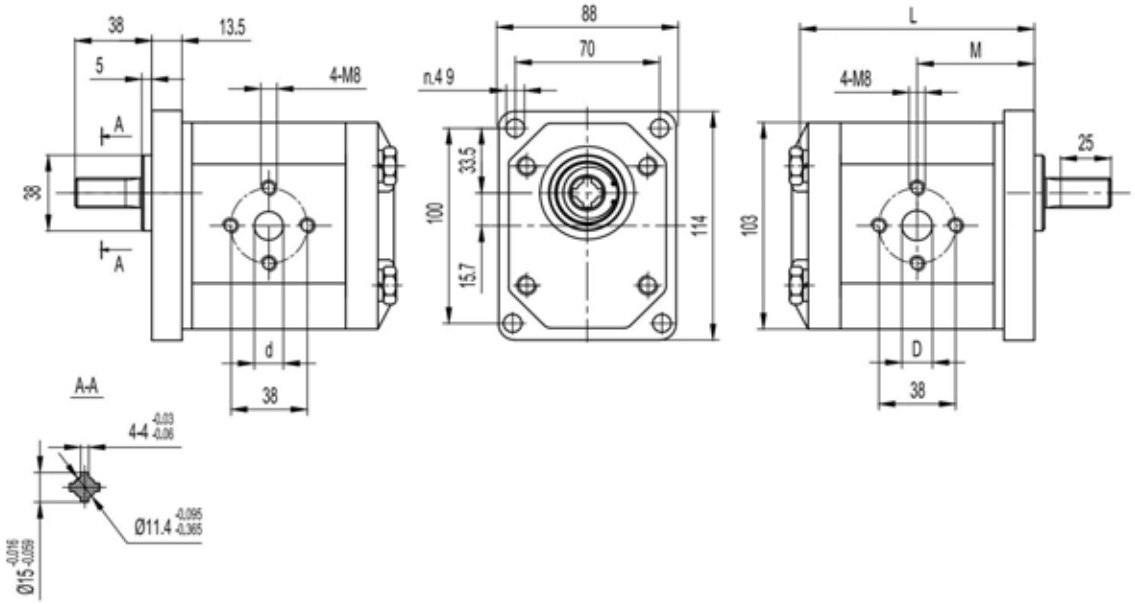


| Type | Displacement | Max. pressure | | | Max. speed | Min. speed | Dimensions | | | |
|---|---|---|---|---|---|---|---|---|---|---|
| | | P1 | P2 | P3 | | | M | L | D | d |
| | ($cm^3$/rev) | bar | bar | bar | (r/min) | (r/min) | mm | mm | mm | mm |
| KGP2E3-D-3 | 3 | 200 | 225 | 250 | 4000 | 800 | 43.6 | 91.1 | 14 | 10 |
| KGP2E3-D-4 | 4 | 200 | 225 | 250 | 4000 | 600 | 44.4 | 92.7 | 14 | 10 |
| KGP2E3-D-6 | 6 | 200 | 225 | 250 | 4000 | 600 | 46 | 96 | 14 | 10 |
| KGP2E3-D-8 | 8 | 200 | 225 | 250 | 3500 | 500 | 47.7 | 99.3 | 14 | 10 |
| KGP2E3-D-10 | 10 | 200 | 225 | 250 | 3000 | 500 | 49.3 | 102.6 | 18 | 15 |
| KGP2E3-D-12 | 12 | 200 | 225 | 250 | 3000 | 500 | 51 | 105.9 | 18 | 15 |
| KGP2E3-D-14 | 14 | 200 | 225 | 250 | 3000 | 500 | 52.7 | 109.3 | 18 | 15 |
| KGP2E3-D-16 | 16 | 200 | 225 | 250 | 3000 | 500 | 54.4 | 112.7 | 18 | 15 |
| KGP2E3-D-18 | 18 | 200 | 225 | 250 | 3000 | 500 | 56 | 116 | 18 | 15 |
| KGP2E3-D-20 | 20 | 200 | 225 | 250 | 3000 | 400 | 57.7 | 119.3 | 18 | 15 |
| KGP2E3-D-22 | 22 | 200 | 225 | 250 | 3000 | 400 | 59.3 | 122.6 | 18 | 15 |
| KGP2E3-D-25 | 25 | 200 | 215 | 230 | 3000 | 400 | 61.8 | 127.6 | 20 | 15 |
| KGP2E3-D-28 | 28 | 180 | 190 | 200 | 2500 | 400 | 64.3 | 132.6 | 20 | 15 |
| KGP2E3-D-30 | 30 | 160 | 170 | 180 | 2500 | 400 | 66 | 135.9 | 20 | 15 |

# KGP2E4

★ Use axial gap automatic compensation mechanism.

★ High sustained working pressure and long service life .

★ Anti fouling ability is strong and suitable for tractors , power units , machines and other kinds Of hydraulic systems .

**INLET** **OUTLET**

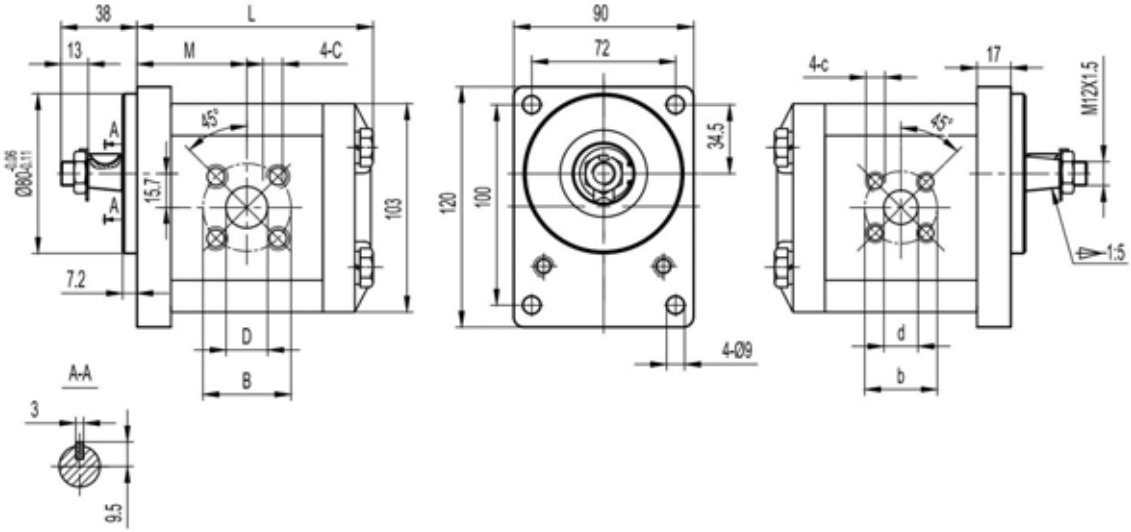


| Type | Displacement | Max. pressure | | | Max. | Min. | Dimensions | | | | | | | |
|---|---|---|---|---|---|---|---|---|---|---|---|---|---|---|
| | | P1 | P2 | P3 | speed | speed | M | L | B | D | C | b | d | c |
| | ($cm^3$/rev) | bar | bar | bar | (r/min) | (r/min) | mm | mm | mm | mm | | mm | mm | |
| KGP2E4-S-3 | 3 | 200 | 225 | 250 | 4000 | 800 | 43.6 | 91.1 | 40 | 15 | M6 | 35 | 15 | M6 |
| KGP2E4-S-4 | 4 | 200 | 225 | 250 | 4000 | 600 | 44.4 | 92.7 | 40 | 15 | M6 | 35 | 15 | M6 |
| KGP2E4-S-6 | 6 | 200 | 225 | 250 | 4000 | 600 | 46 | 96 | 40 | 15 | M6 | 35 | 15 | M6 |
| KGP2E4-S-8 | 8 | 200 | 225 | 250 | 3500 | 500 | 47.7 | 99.3 | 40 | 15 | M6 | 35 | 15 | M6 |
| KGP2E4-S-10 | 10 | 200 | 225 | 250 | 3000 | 500 | 49.3 | 102.6 | 40 | 20 | M6 | 35 | 15 | M6 |
| KGP2E4-S-12 | 12 | 200 | 225 | 250 | 3000 | 500 | 51 | 105.9 | 40 | 20 | M6 | 35 | 15 | M6 |
| KGP2E4-S-14 | 14 | 200 | 225 | 250 | 3000 | 500 | 52.7 | 109.3 | 40 | 20 | M6 | 35 | 15 | M6 |
| KGP2E4-S-16 | 16 | 200 | 225 | 250 | 3000 | 500 | 54.4 | 112.7 | 40 | 20 | M6 | 35 | 15 | M6 |
| KGP2E4-S-18 | 18 | 200 | 225 | 250 | 3000 | 500 | 56 | 116 | 40 | 20 | M6 | 35 | 15 | M6 |
| KGP2E4-S-20 | 20 | 200 | 225 | 250 | 3000 | 400 | 57.7 | 119.3 | 40 | 20 | M6 | 35 | 15 | M6 |
| KGP2E4-S-22 | 22 | 200 | 225 | 250 | 3000 | 400 | 59.3 | 122.6 | 40 | 20 | M6 | 35 | 15 | M6 |
| KGP2E4-S-25 | 25 | 200 | 215 | 230 | 3000 | 400 | 61.8 | 127.6 | 40 | 20 | M6 | 35 | 15 | M6 |
| KGP2E4-S-28 | 28 | 180 | 190 | 200 | 2500 | 400 | 64.3 | 132.6 | 40 | 20 | M6 | 35 | 15 | M6 |
| KGP2E4-S-30 | 30 | 160 | 170 | 180 | 2500 | 400 | 66 | 135.9 | 40 | 20 | M6 | 35 | 15 | M6 |

# KGP2E5

★ Use axial gap automatic compensation mechanism.

★ High sustained working pressure and long service life .

★ Anti fouling ability is strong and suitable for tractors , power units , machines and other kinds Of hydraulic systems .

**OUTLET** **INLET**

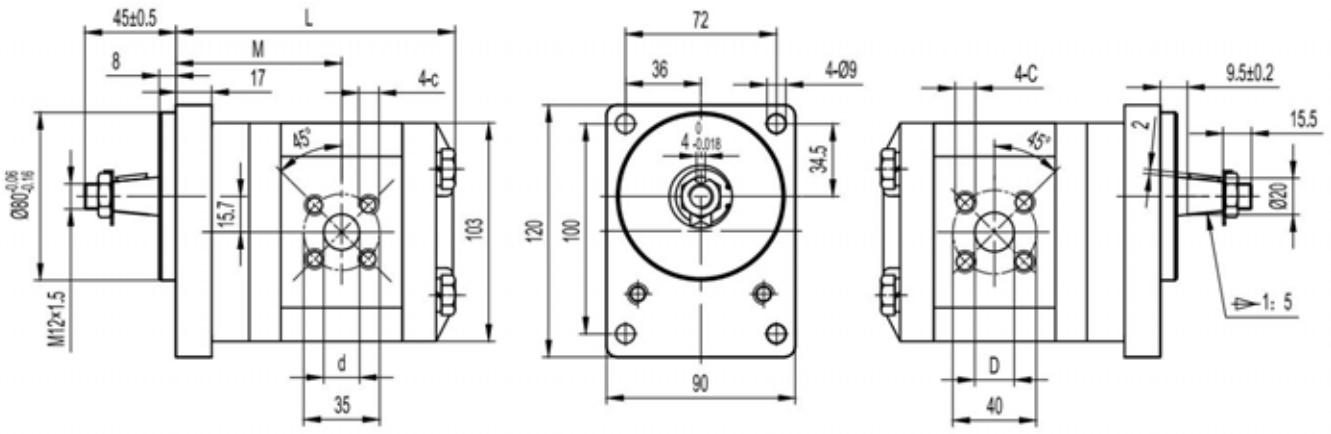


| Type | Displacement | Max. pressure | | | Max. speed | Min. speed | Dimensions | | | |
|---|---|---|---|---|---|---|---|---|---|---|
| | | P1 | P2 | P3 | | | M | L | D | d |
| | ($cm^3$/rev) | bar | bar | bar | (r/min) | (r/min) | mm | mm | mm | mm |
| KGP2E5-D-3 | 3 | 200 | 225 | 250 | 4000 | 800 | 71.9 | 123.1 | 15 | 15 |
| KGP2E5-D-4 | 4 | 200 | 225 | 250 | 4000 | 600 | 71.9 | 124.7 | 15 | 15 |
| KGP2E5-D-6 | 6 | 200 | 225 | 250 | 4000 | 600 | 73.1 | 128.0 | 15 | 15 |
| KGP2E5-D-8 | 8 | 200 | 225 | 250 | 3500 | 500 | 75.2 | 131.3 | 15 | 15 |
| KGP2E5-D-10 | 10 | 200 | 225 | 250 | 3000 | 500 | 75.7 | 134.6 | 20 | 15 |
| KGP2E5-D-12 | 12 | 200 | 225 | 250 | 3000 | 500 | 79.5 | 137.9 | 20 | 15 |
| KGP2E5-D-14 | 14 | 200 | 225 | 250 | 3000 | 500 | 79.5 | 141.3 | 20 | 15 |
| KGP2E5-D-16 | 16 | 200 | 225 | 250 | 3000 | 500 | 79.5 | 144.7 | 20 | 15 |
| KGP2E5-D-18 | 18 | 200 | 225 | 250 | 3000 | 500 | 79.5 | 148.0 | 20 | 15 |
| KGP2E5-D-20 | 20 | 200 | 225 | 250 | 3000 | 400 | 79.5 | 151.3 | 20 | 15 |
| KGP2E5-D-22 | 22 | 200 | 225 | 250 | 3000 | 400 | 87.1 | 154.6 | 20 | 15 |
| KGP2E5-D-25 | 25 | 200 | 215 | 230 | 3000 | 400 | 93.8 | 159.6 | 20 | 15 |
| KGP2E5-D-28 | 28 | 180 | 190 | 200 | 2500 | 400 | 96.3 | 164.6 | 20 | 15 |
| KGP2E5-D-30 | 30 | 160 | 170 | 180 | 2500 | 400 | 98.0 | 167.9 | 20 | 15 |

# KGP2Q6

★ Use axial gap automatic compensation mechanism.

★ High sustained working pressure and long service life .

★ Anti fouling ability is strong and suitable for tractors , power units , machines and other kinds Of hydraulic systems .

**OUTLET** **INLET**

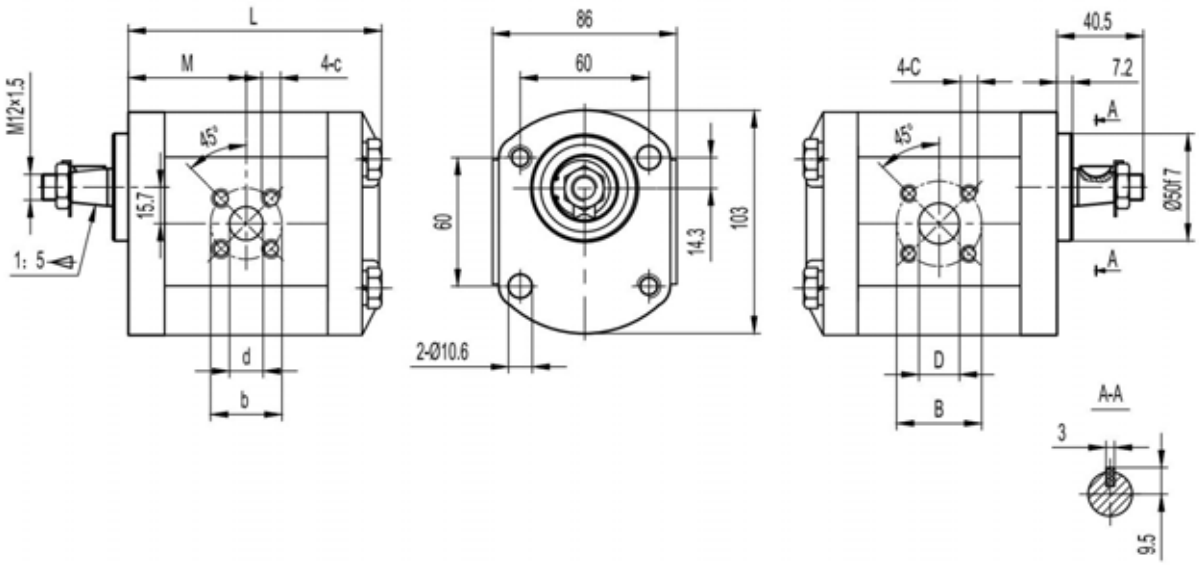


| Type | Displacement | Max. pressure | | | Max. | Min. | Dimensions | | | | | | | |
|---|---|---|---|---|---|---|---|---|---|---|---|---|---|---|
| | | P1 | P2 | P3 | speed | speed | M | L | B | D | C | b | d | c |
| | ($cm^3$/rev) | bar | bar | bar | (r/min) | (r/min) | mm | mm | mm | mm | | mm | mm | |
| KGP2Q6-D-3 | 3 | 200 | 225 | 250 | 4000 | 800 | 37.4 | 88.6 | 40 | 15 | M6 | 35 | 15 | M6 |
| KGP2Q6-D-4 | 4 | 200 | 225 | 250 | 4000 | 600 | 37.4 | 90.2 | 40 | 15 | M6 | 35 | 15 | M6 |
| KGP2Q6-D-6 | 6 | 200 | 225 | 250 | 4000 | 600 | 38.6 | 93.5 | 40 | 15 | M6 | 35 | 15 | M6 |
| KGP2Q6-D-8 | 8 | 200 | 225 | 250 | 3500 | 500 | 40.7 | 96.8 | 40 | 15 | M6 | 35 | 15 | M6 |
| KGP2Q6-D-10 | 10 | 200 | 225 | 250 | 3000 | 500 | 41.2 | 100.1 | 40 | 20 | M6 | 35 | 15 | M6 |
| KGP2Q6-D-12 | 12 | 200 | 225 | 250 | 3000 | 500 | 45 | 103.4 | 40 | 20 | M6 | 35 | 15 | M6 |
| KGP2Q6-D-14 | 14 | 200 | 225 | 250 | 3000 | 500 | 45 | 106.8 | 40 | 20 | M6 | 35 | 15 | M6 |
| KGP2Q6-D-16 | 16 | 200 | 225 | 250 | 3000 | 500 | 45 | 110.2 | 40 | 20 | M6 | 35 | 15 | M6 |
| KGP2Q6-D-18 | 18 | 200 | 225 | 250 | 3000 | 500 | 45 | 113.5 | 40 | 20 | M6 | 35 | 15 | M6 |
| KGP2Q6-D-20 | 20 | 200 | 225 | 250 | 3000 | 400 | 45 | 116.8 | 40 | 20 | M6 | 35 | 15 | M6 |
| KGP2Q6-D-22 | 22 | 200 | 225 | 250 | 3000 | 400 | 52.6 | 120.1 | 40 | 20 | M6 | 35 | 15 | M6 |
| KGP2Q6-D-25 | 25 | 200 | 215 | 230 | 3000 | 400 | 59.3 | 125.1 | 40 | 20 | M6 | 35 | 15 | M6 |
| KGP2Q6-D-28 | 28 | 180 | 190 | 200 | 2500 | 400 | 61.8 | 130.1 | 40 | 20 | M6 | 35 | 15 | M6 |
| KGP2Q6-D-30 | 30 | 160 | 170 | 180 | 2500 | 400 | 63.5 | 133.4 | 40 | 20 | M6 | 35 | 15 | M6 |

# KGP2Q7

★ Use axial gap automatic compensation mechanism.

★ High sustained working pressure and long service life .

★ Anti fouling ability is strong and suitable for tractors , power units , machines and other kinds 0f hydraulic systems .

**INLET** **OUTLET**

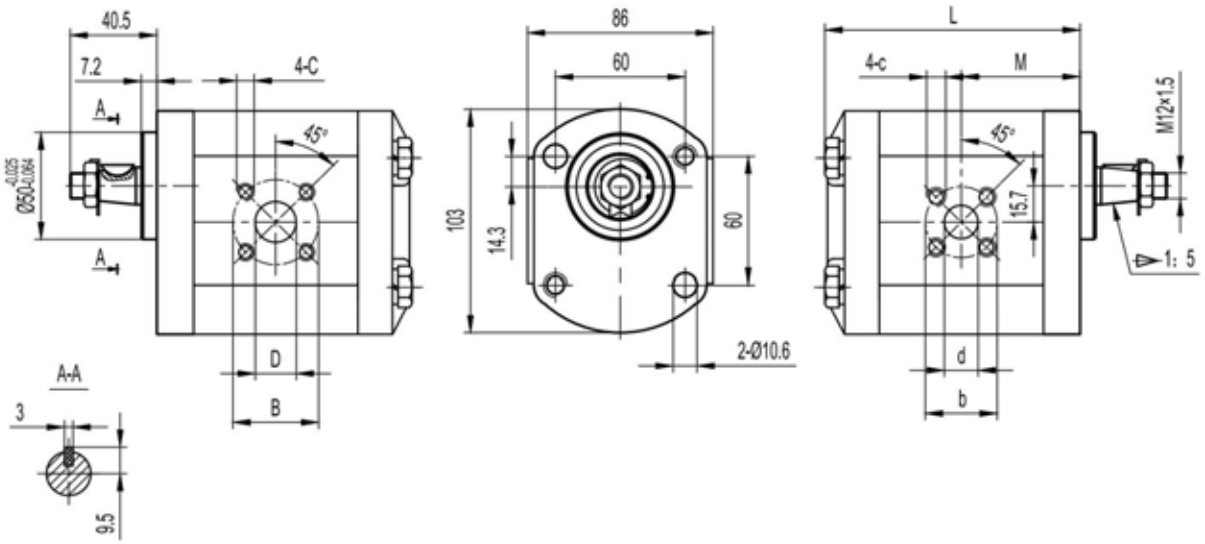


| Type | Displacement | Max. pressure | | | Max. | Min. | Dimensions | | | | | | | |
|---|---|---|---|---|---|---|---|---|---|---|---|---|---|---|
| | | P1 | P2 | P3 | speed | speed | M | L | B | D | C | b | d | c |
| | ($cm^3$/rev) | bar | bar | bar | (r/min) | (r/min) | mm | mm | mm | mm | | mm | mm | |
| KGP2Q7-S-3 | 3 | 200 | 225 | 250 | 4000 | 800 | 37.4 | 88.6 | 40 | 15 | M6 | 35 | 15 | M6 |
| KGP2Q7-S-4 | 4 | 200 | 225 | 250 | 4000 | 600 | 37.4 | 90.2 | 40 | 15 | M6 | 35 | 15 | M6 |
| KGP2Q7-S-6 | 6 | 200 | 225 | 250 | 4000 | 600 | 38.6 | 93.5 | 40 | 15 | M6 | 35 | 15 | M6 |
| KGP2Q7-S-8 | 8 | 200 | 225 | 250 | 3500 | 500 | 40.7 | 96.8 | 40 | 15 | M6 | 35 | 15 | M6 |
| KGP2Q7-S-10 | 10 | 200 | 225 | 250 | 3000 | 500 | 41.2 | 100.1 | 40 | 20 | M6 | 35 | 15 | M6 |
| KGP2Q7-S-12 | 12 | 200 | 225 | 250 | 3000 | 500 | 45 | 103.4 | 40 | 20 | M6 | 35 | 15 | M6 |
| KGP2Q7-S-14 | 14 | 200 | 225 | 250 | 3000 | 500 | 45 | 106.8 | 40 | 20 | M6 | 35 | 15 | M6 |
| KGP2Q7-S-16 | 16 | 200 | 225 | 250 | 3000 | 500 | 45 | 110.2 | 40 | 20 | M6 | 35 | 15 | M6 |
| KGP2Q7-S-18 | 18 | 200 | 225 | 250 | 3000 | 500 | 45 | 113.5 | 40 | 20 | M6 | 35 | 15 | M6 |
| KGP2Q7-S-20 | 20 | 200 | 225 | 250 | 3000 | 400 | 45 | 116.8 | 40 | 20 | M6 | 35 | 15 | M6 |
| KGP2Q7-S-22 | 22 | 200 | 225 | 250 | 3000 | 400 | 52.6 | 120.1 | 40 | 20 | M6 | 35 | 15 | M6 |
| KGP2Q7-S-25 | 25 | 200 | 215 | 230 | 3000 | 400 | 59.3 | 125.1 | 40 | 20 | M6 | 35 | 15 | M6 |
| KGP2Q7-S-28 | 28 | 180 | 190 | 200 | 2500 | 400 | 61.8 | 130.1 | 40 | 20 | M6 | 35 | 15 | M6 |
| KGP2Q7-S-30 | 30 | 160 | 170 | 180 | 2500 | 400 | 63.5 | 133.4 | 40 | 20 | M6 | 35 | 15 | M6 |

# KGP2Q8

★ Use axial gap automatic compensation mechanism.

★ High sustained working pressure and long service life .

★ Anti fouling ability is strong and suitable for tractors , power units , machines and other kinds Of hydraulic systems .

**OUTLET** **INLET**

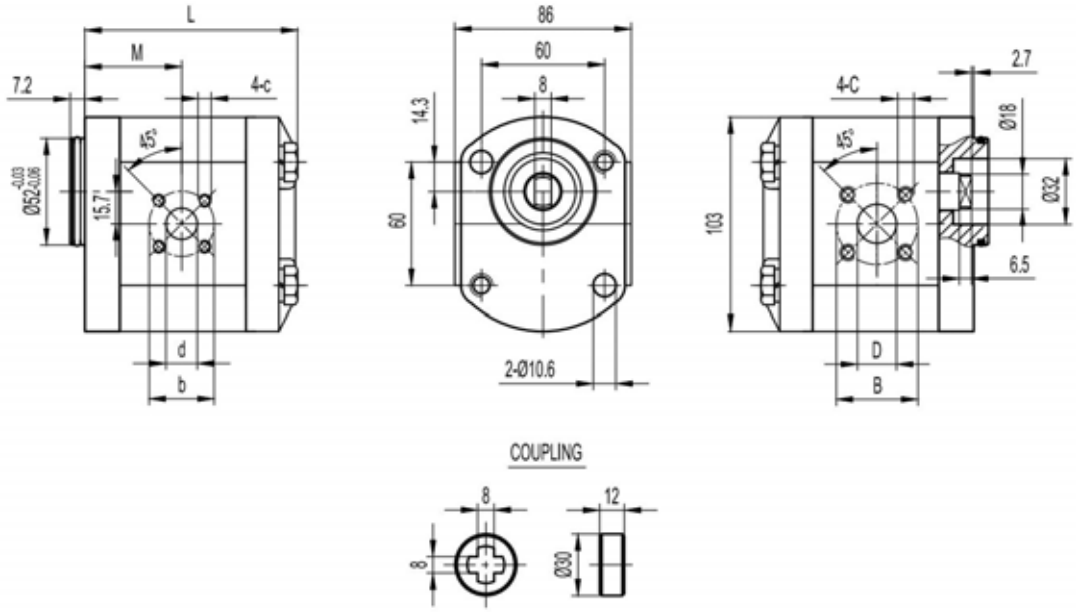


| Type | Displacement | Max. pressure | | | Max. | Min. | Dimensions | | | | | | | |
|---|---|---|---|---|---|---|---|---|---|---|---|---|---|---|
| | | P1 | P2 | P3 | speed | speed | M | L | B | D | C | b | d | c |
| | ($cm^3$/rev) | bar | bar | bar | (r/min) | (r/min) | mm | mm | mm | mm | | mm | mm | |
| KGP2Q8-D-3 | 3 | 200 | 225 | 250 | 4000 | 800 | 37.4 | 88.6 | 40 | 15 | M6 | 35 | 15 | M6 |
| KGP2Q8-D-4 | 4 | 200 | 225 | 250 | 4000 | 600 | 37.4 | 90.2 | 40 | 15 | M6 | 35 | 15 | M6 |
| KGP2Q8-D-6 | 6 | 200 | 225 | 250 | 4000 | 600 | 38.6 | 93.5 | 40 | 15 | M6 | 35 | 15 | M6 |
| KGP2Q8-D-8 | 8 | 200 | 225 | 250 | 3500 | 500 | 40.7 | 96.8 | 40 | 15 | M6 | 35 | 15 | M6 |
| KGP2Q8-D-10 | 10 | 200 | 225 | 250 | 3000 | 500 | 41.2 | 100.1 | 40 | 20 | M6 | 35 | 15 | M6 |
| KGP2Q8-D-12 | 12 | 200 | 225 | 250 | 3000 | 500 | 45 | 103.4 | 40 | 20 | M6 | 35 | 15 | M6 |
| KGP2Q8-D-14 | 14 | 200 | 225 | 250 | 3000 | 500 | 45 | 106.8 | 40 | 20 | M6 | 35 | 15 | M6 |
| KGP2Q8-D-16 | 16 | 200 | 225 | 250 | 3000 | 500 | 45 | 110.2 | 40 | 20 | M6 | 35 | 15 | M6 |
| KGP2Q8-D-18 | 18 | 200 | 225 | 250 | 3000 | 500 | 45 | 113.5 | 40 | 20 | M6 | 35 | 15 | M6 |
| KGP2Q8-D-20 | 20 | 200 | 225 | 250 | 3000 | 400 | 45 | 116.8 | 40 | 20 | M6 | 35 | 15 | M6 |
| KGP2Q8-D-22 | 22 | 200 | 225 | 250 | 3000 | 400 | 52.6 | 120.1 | 40 | 20 | M6 | 35 | 15 | M6 |
| KGP2Q8-D-25 | 25 | 200 | 215 | 230 | 3000 | 400 | 59.3 | 125.1 | 40 | 20 | M6 | 35 | 15 | M6 |
| KGP2Q8-D-28 | 28 | 180 | 190 | 200 | 2500 | 400 | 61.8 | 130.1 | 40 | 20 | M6 | 35 | 15 | M6 |
| KGP2Q8-D-30 | 30 | 160 | 170 | 180 | 2500 | 400 | 63.5 | 133.4 | 40 | 20 | M6 | 35 | 15 | M6 |

# KGP2A2

★ Use axial gap automatic compensation mechanism.

★ High sustained working pressure and long service life .

★ Anti fouling ability is strong and suitable for tractors , power units , machines and other kinds 0f hydraulic systems .

**OUTLET** **INLET**

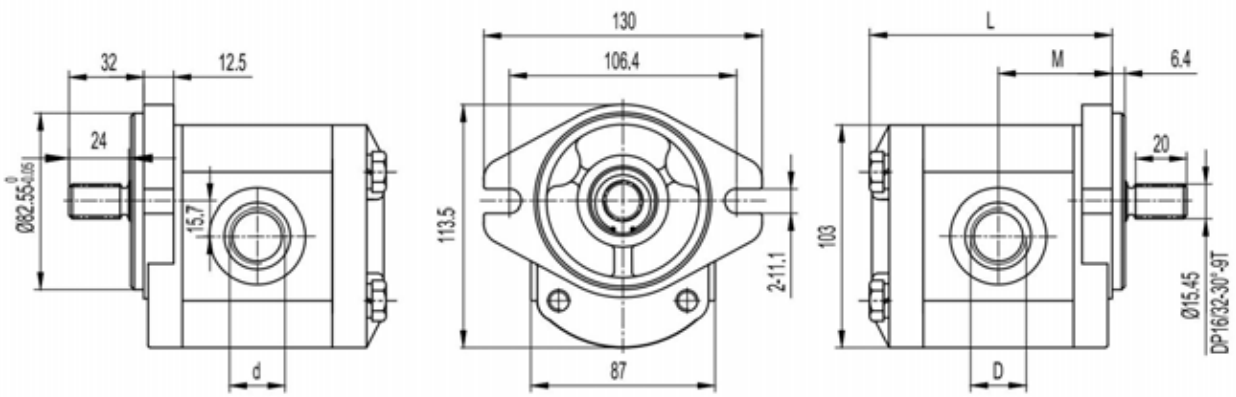


| Type | Displacement | Max. pressure | | | Max. speed | Min. speed | Dimensions | | | |
|---|---|---|---|---|---|---|---|---|---|---|
| | | P1 | P2 | P3 | | | M | L | D | d |
| | ($cm^3$/rev) | bar | bar | bar | (r/min) | (r/min) | mm | mm | | |
| KGP2A2-D-3 | 3 | 200 | 225 | 250 | 4000 | 800 | 43.6 | 91.1 | G1/2 | G1/2 |
| KGP2A2-D-4 | 4 | 200 | 225 | 250 | 4000 | 600 | 44.4 | 92.7 | G1/2 | G1/2 |
| KGP2A2-D-6 | 6 | 200 | 225 | 250 | 4000 | 600 | 46 | 96 | G1/2 | G1/2 |
| KGP2A2-D-8 | 8 | 200 | 225 | 250 | 3500 | 500 | 47.7 | 99.3 | G3/4 | G1/2 |
| KGP2A2-D-10 | 10 | 200 | 225 | 250 | 3000 | 500 | 49.3 | 102.6 | G3/4 | G1/2 |
| KGP2A2-D-12 | 12 | 200 | 225 | 250 | 3000 | 500 | 51 | 105.9 | G3/4 | G1/2 |
| KGP2A2-D-14 | 14 | 200 | 225 | 250 | 3000 | 500 | 52.7 | 109.3 | G3/4 | G1/2 |
| KGP2A2-D-16 | 16 | 200 | 225 | 250 | 3000 | 500 | 54.4 | 112.7 | G3/4 | G1/2 |
| KGP2A2-D-18 | 18 | 200 | 225 | 250 | 3000 | 500 | 56 | 116 | G3/4 | G1/2 |
| KGP2A2-D-20 | 20 | 200 | 225 | 250 | 3000 | 400 | 57.7 | 119.3 | G3/4 | G1/2 |
| KGP2A2-D-22 | 22 | 200 | 225 | 250 | 3000 | 400 | 59.3 | 122.6 | G3/4 | G1/2 |
| KGP2A2-D-25 | 25 | 200 | 215 | 230 | 3000 | 400 | 61.8 | 127.6 | G3/4 | G1/2 |
| KGP2A2-D-28 | 28 | 180 | 190 | 200 | 2500 | 400 | 64.3 | 132.6 | G1 | G3/4 |
| KGP2A2-D-30 | 30 | 160 | 170 | 180 | 2500 | 400 | 66 | 135.9 | G1 | G3/4 |

# KGP2A2-BB

★ Use axial gap automatic compensation mechanism.

★ High sustained working pressure and long service life .

★ Anti fouling ability is strong and suitable for tractors , power units , machines and other kinds 0f hydraulic systems .

**INLET** **OUTLET**

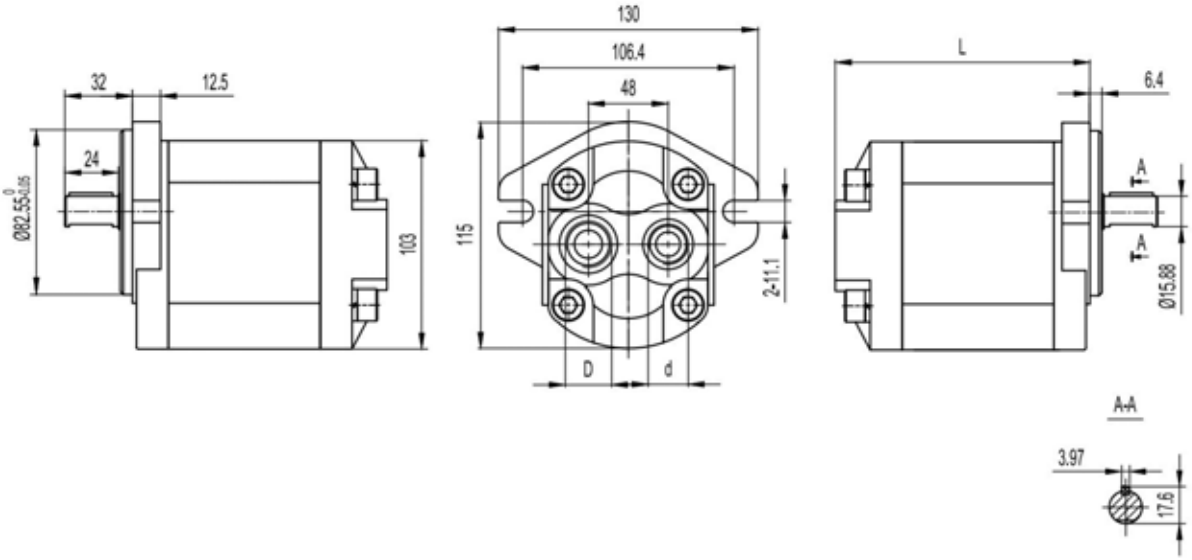


| Type | Displacement | Max. pressure | | | Max. speed | Min. speed | Dimensions | | |
|---|---|---|---|---|---|---|---|---|---|
| | | P1 | P2 | P3 | | | L | D | d |
| | ($cm^3$/rev) | bar | bar | bar | (r/min) | (r/min) | mm | | |
| KGP2A2-S-3-BB | 3 | 200 | 225 | 250 | 4000 | 800 | 103.1 | 1 1/16-12UNF | 7/8-14UNF |
| KGP2A2-S-4-BB | 4 | 200 | 225 | 250 | 4000 | 600 | 104.7 | 1 1/16-12UNF | 7/8-14UNF |
| KGP2A2-S-6-BB | 6 | 200 | 225 | 250 | 4000 | 600 | 108 | 1 1/16-12UNF | 7/8-14UNF |
| KGP2A2-S-8-BB | 8 | 200 | 225 | 250 | 3500 | 500 | 111.3 | 1 1/16-12UNF | 7/8-14UNF |
| KGP2A2-S-10-BB | 10 | 200 | 225 | 250 | 3000 | 500 | 114.6 | 1 1/16-12UNF | 7/8-14UNF |
| KGP2A2-S-12-BB | 12 | 200 | 225 | 250 | 3000 | 500 | 117.9 | 1 1/16-12UNF | 7/8-14UNF |
| KGP2A2-S-14-BB | 14 | 200 | 225 | 250 | 3000 | 500 | 121.3 | 1 1/16-12UNF | 7/8-14UNF |
| KGP2A2-S-16-BB | 16 | 200 | 225 | 250 | 3000 | 500 | 124.7 | 1 1/16-12UNF | 7/8-14UNF |
| KGP2A2-S-18-BB | 18 | 200 | 225 | 250 | 3000 | 500 | 128 | 1 1/16-12UNF | 7/8-14UNF |
| KGP2A2-S-20-BB | 20 | 200 | 225 | 250 | 3000 | 400 | 131.3 | 1 1/16-12UNF | 7/8-14UNF |
| KGP2A2-S-22-BB | 22 | 200 | 225 | 250 | 3000 | 400 | 134.6 | 1 1/16-12UNF | 7/8-14UNF |
| KGP2A2-S-25-BB | 25 | 200 | 215 | 230 | 3000 | 400 | 139.6 | 1 1/16-12UNF | 7/8-14UNF |
| KGP2A2-S-28-BB | 28 | 180 | 190 | 200 | 2500 | 400 | 144.6 | 1 1/16-12UNF | 7/8-14UNF |
| KGP2A2-S-30-BB | 30 | 160 | 170 | 180 | 2500 | 400 | 147.9 | 1 5/16-12UNF | 7/8-14UNF |

# KGP2A2-W0T0

★ Use axial gap automatic compensation mechanism.

★ High sustained working pressure and long service life .

★ Anti fouling ability is strong and suitable for tractors , power units , machines and other kinds Of hydraulic systems .

**OUTLET** **INLET**

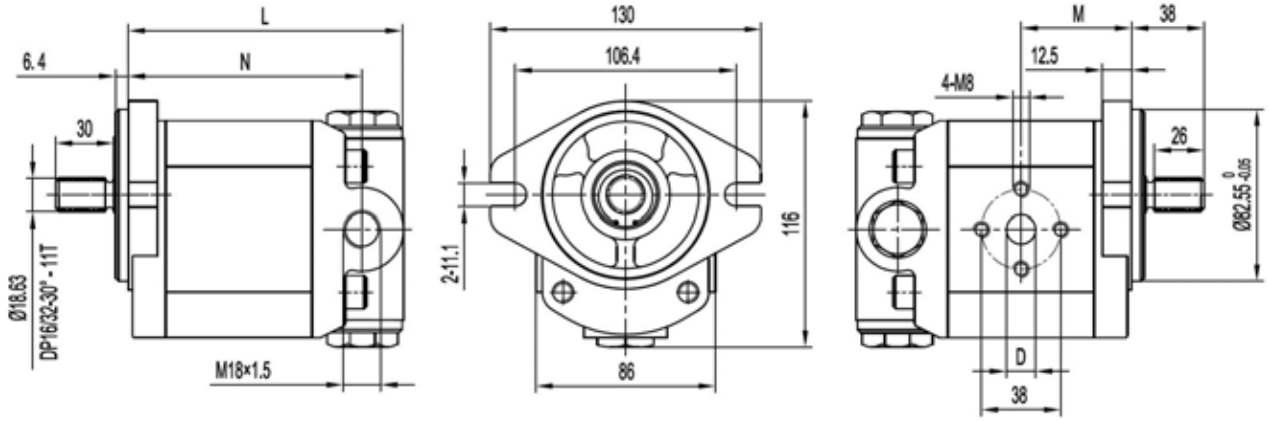


| Type | Displacement | Control pressure | Control flow | Max. speed | Min. speed | Dimensions | | | |
|---|---|---|---|---|---|---|---|---|---|
| | | | | | | L | M | N | D |
| | ($cm^3$/rev) | bar | L/min | (r/min) | (r/min) | mm | mm | mm | mm |
| KGP2A2-D-3-W0T0 | 3 | 100～180 | 2～30 | 4000 | 800 | 112.1 | 43.6 | 92.1 | 14 |
| KGP2A2-D-4-W0T0 | 4 | | | 4000 | 600 | 113.7 | 44.4 | 93.7 | 14 |
| KGP2A2-D-6-W0T0 | 6 | | | 4000 | 600 | 117 | 46 | 97 | 14 |
| KGP2A2-D-8-W0T0 | 8 | | | 3500 | 500 | 120.3 | 47.7 | 100.3 | 14 |
| KGP2A2-D-10-W0T0 | 10 | | | 3000 | 500 | 123.6 | 49.3 | 103.6 | 18 |
| KGP2A2-D-12-W0T0 | 12 | | | 3000 | 500 | 126.9 | 51 | 106.9 | 18 |
| KGP2A2-D-14-W0T0 | 14 | | | 3000 | 500 | 130.3 | 52.7 | 110.3 | 18 |
| KGP2A2-D-16-W0T0 | 16 | | | 3000 | 500 | 133.7 | 54.4 | 113.7 | 18 |
| KGP2A2-D-18-W0T0 | 18 | | | 3000 | 500 | 137 | 56 | 117 | 18 |
| KGP2A2-D-20-W0T0 | 20 | | | 3000 | 400 | 140.3 | 57.7 | 120.3 | 18 |
| KGP2A2-D-22-W0T0 | 22 | | | 3000 | 400 | 143.6 | 59.3 | 123.6 | 20 |
| KGP2A2-D-25-W0T0 | 25 | | | 3000 | 400 | 148.6 | 61.8 | 128.6 | 20 |
| KGP2A2-D-28-W0T0 | 28 | | | 2500 | 400 | 153.6 | 64.3 | 133.6 | 20 |
| KGP2A2-D-30-W0T0 | 30 | | | 2500 | 400 | 156.9 | 66 | 136.9 | 20 |

# KGP2E6-W1T0

★ Use axial gap automatic compensation mechanism.

★ High sustained working pressure and long service life .

★ Anti fouling ability is strong and suitable for tractors , power units , machines and other kinds 0f hydraulic systems .

**INLET** **OUTLET**

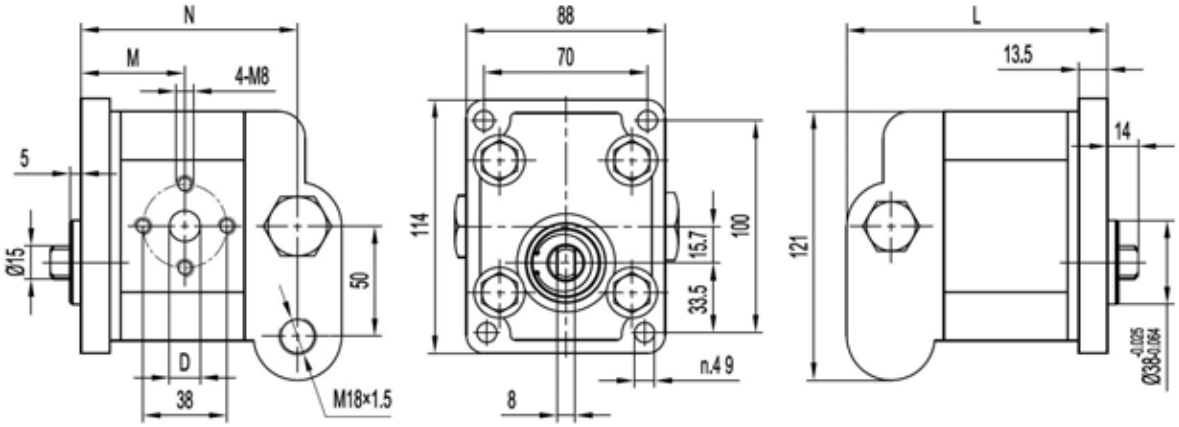


| Type | Displacement | Control pressure | Control flow | Max. speed | Min. speed | Dimensions | | | |
|---|---|---|---|---|---|---|---|---|---|
| | | | | | | L | M | N | D |
| | (cm³/rev) | bar | L/min | (r/min) | (r/min) | mm | mm | mm | mm |
| KGP2E6-D-3-W1T0 | 3 | 100～180 | 2～30 | 4000 | 800 | 112.1 | 43.6 | 96.1 | 13 |
| KGP2E6-D-4-W1T0 | 4 | | | 4000 | 600 | 113.7 | 44.4 | 97.7 | 13 |
| KGP2E6-D-6-W1T0 | 6 | | | 4000 | 600 | 117 | 46 | 101 | 13 |
| KGP2E6-D-8-W1T0 | 8 | | | 3500 | 500 | 120.3 | 47.7 | 104.3 | 13 |
| KGP2E6-D-10-W1T0 | 10 | | | 3000 | 500 | 123.6 | 49.3 | 107.6 | 19 |
| KGP2E6-D-12-W1T0 | 12 | | | 3000 | 500 | 126.9 | 51 | 110.9 | 19 |
| KGP2E6-D-14-W1T0 | 14 | | | 3000 | 500 | 130.3 | 52.7 | 114.3 | 19 |
| KGP2E6-D-16-W1T0 | 16 | | | 3000 | 500 | 133.7 | 54.4 | 117.7 | 19 |
| KGP2E6-D-18-W1T0 | 18 | | | 3000 | 500 | 137 | 56 | 121 | 19 |
| KGP2E6-D-20-W1T0 | 20 | | | 3000 | 400 | 140.3 | 57.7 | 124.3 | 19 |
| KGP2E6-D-22-W1T0 | 22 | | | 3000 | 400 | 143.6 | 59.3 | 127.6 | 19 |
| KGP2E6-D-25-W1T0 | 25 | | | 3000 | 400 | 148.6 | 61.8 | 132.6 | 19 |
| KGP2E6-D-28-W1T0 | 28 | | | 2500 | 400 | 153.6 | 64.3 | 137.6 | 19 |
| KGP2E6-D-30-W1T0 | 30 | | | 2500 | 400 | 156.9 | 66 | 140.9 | 21 |

# KGM2E2

★ Use axial gap automatic compensation mechanism.

★ High sustained working pressure and long service life .

★ Anti fouling ability is strong and suitable for tractors , power units , machines and other kinds Of hydraulic systems .

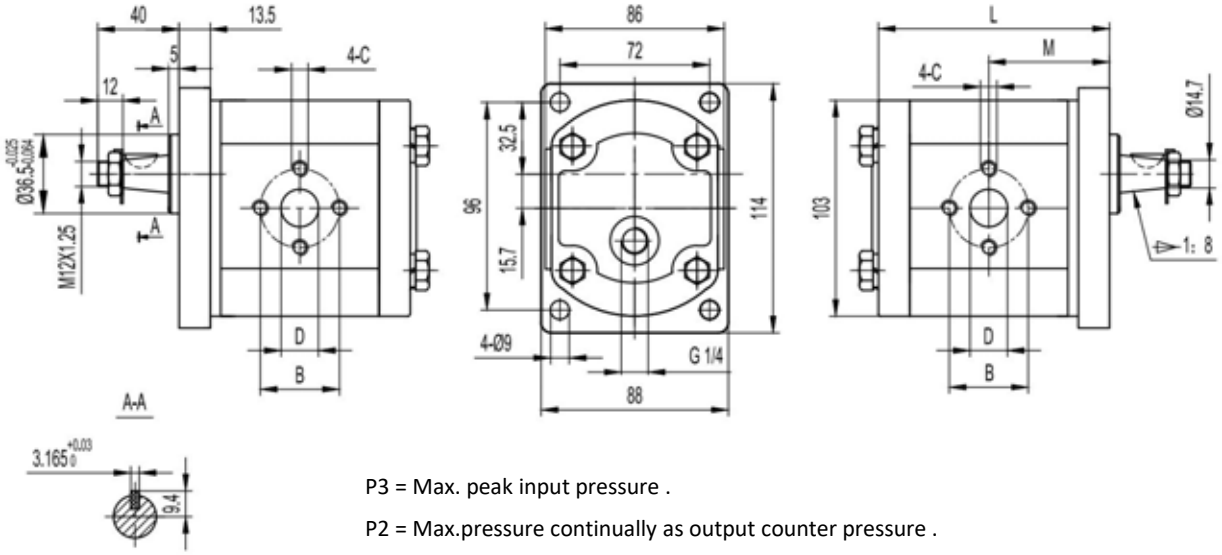


P3 = Max. peak input pressure .

P2 = Max.pressure continually as output counter pressure .

P1 = Max. peak input pressure continually .

| Type | Displacement | Max. pressure | | | Max. speed | Min. speed | Dimensions | | | | |
|---|---|---|---|---|---|---|---|---|---|---|---|
| | | P1 | P2 | P3 | | | M | L | B | D | H |
| | ($cm^3$/rev) | bar | bar | bar | (r/min) | (r/min) | mm | mm | mm | mm | |
| KGM2E2-R-3-T3 | 3 | 200 | 225 | 250 | 4000 | 800 | 43.6 | 91.1 | 30 | 13 | M6 |
| KGM2E2-R-4-T3 | 4 | 200 | 225 | 250 | 4000 | 600 | 44.4 | 92.7 | 30 | 13 | M6 |
| KGM2E2-R-6-T3 | 6 | 200 | 225 | 250 | 4000 | 600 | 46 | 96 | 30 | 13 | M6 |
| KGM2E2-R-8-T3 | 8 | 200 | 225 | 250 | 3500 | 500 | 47.7 | 99.3 | 30 | 13 | M6 |
| KGM2E2-R-10-T3 | 10 | 200 | 225 | 250 | 3000 | 500 | 49.3 | 102.6 | 40 | 20 | M8 |
| KGM2E2-R-12-T3 | 12 | 200 | 225 | 250 | 3000 | 500 | 51 | 105.9 | 40 | 20 | M8 |
| KGM2E2-R-14-T3 | 14 | 200 | 225 | 250 | 3000 | 500 | 52.7 | 109.3 | 40 | 20 | M8 |
| KGM2E2-R-16-T3 | 16 | 200 | 225 | 250 | 3000 | 500 | 54.4 | 112.7 | 40 | 20 | M8 |
| KGM2E2-R-18-T3 | 18 | 200 | 225 | 250 | 3000 | 500 | 56 | 116 | 40 | 20 | M8 |
| KGM2E2-R-20-T3 | 20 | 200 | 225 | 250 | 3000 | 400 | 57.7 | 119.3 | 40 | 20 | M8 |
| KGM2E2-R-22-T3 | 22 | 200 | 225 | 250 | 3000 | 400 | 59.3 | 122.6 | 40 | 20 | M8 |
| KGM2E2-R-25-T3 | 25 | 200 | 215 | 230 | 3000 | 400 | 61.8 | 127.6 | 40 | 22 | M8 |
| KGM2E2-R-28-T3 | 28 | 180 | 190 | 200 | 2500 | 400 | 64.3 | 132.6 | 40 | 22 | M8 |
| KGM2E2-R-30-T3 | 30 | 160 | 170 | 180 | 2500 | 400 | 66 | 135.9 | 40 | 22 | M8 |

# KGP2[KAP2]

FRONT COVER

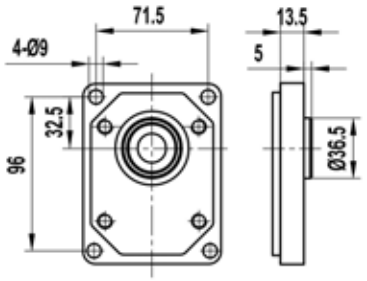


E2

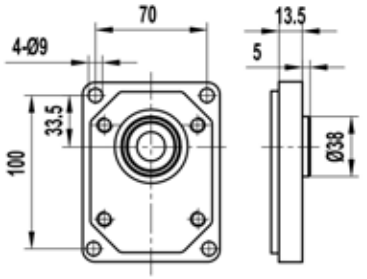


E3

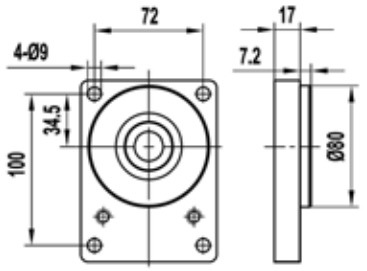


E4

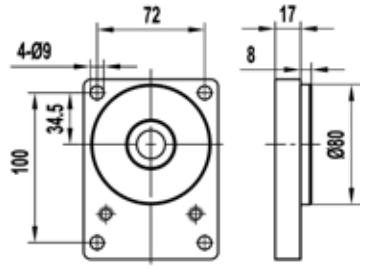


E5

SHAFTS

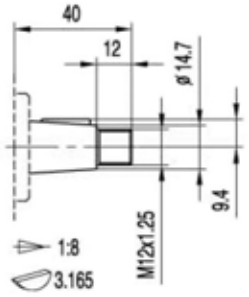


Z5

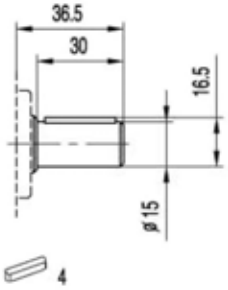


P6

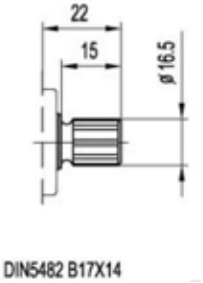


J2

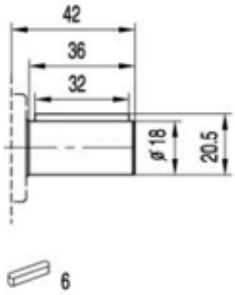


P7

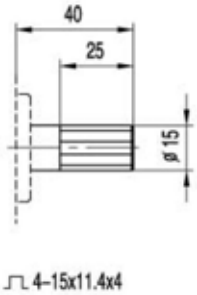


H0

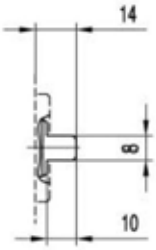


B6

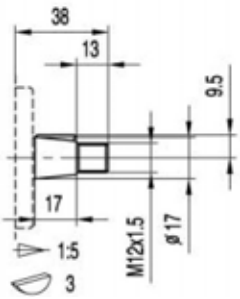


Z6

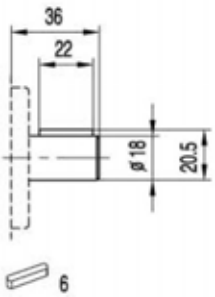


P8

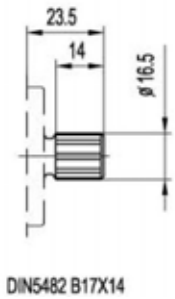


J3

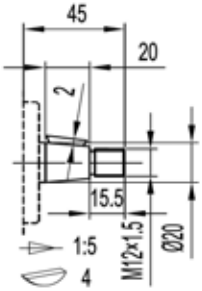


Z7

# KGP2[KAP2]

FRONT COVER

SHAFTS

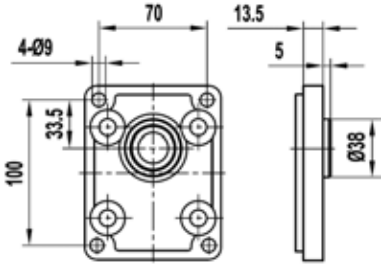


E6

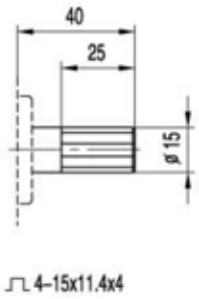


H0

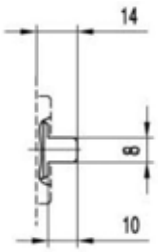


B6

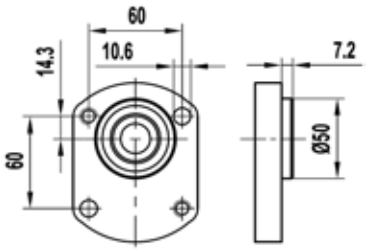


Q6

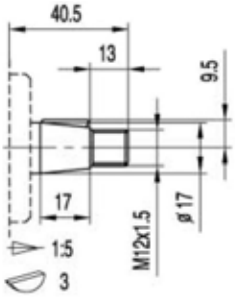


Z8

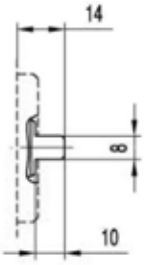


B6

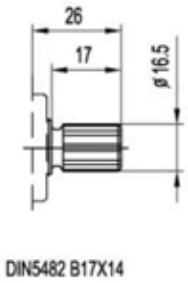


J4

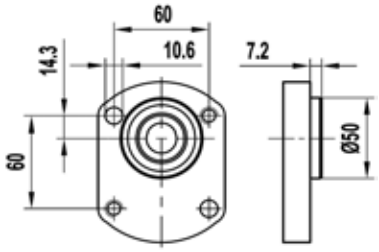


Q7

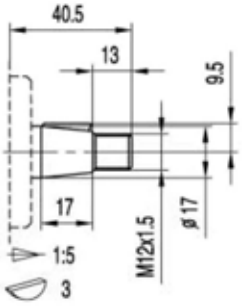


Z8

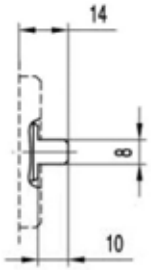


B6

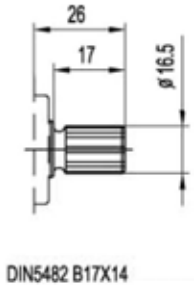


J4

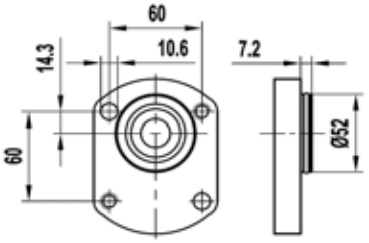


Q8

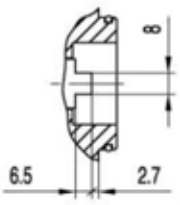


B7

# KGP2[KAP2]

FRONT COVER

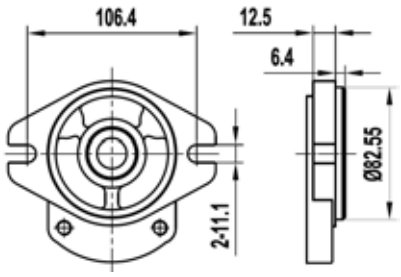


A2

SHAFTS

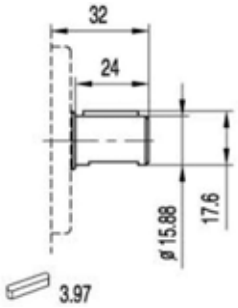


P9

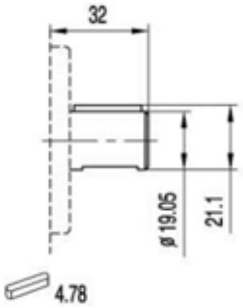


P10

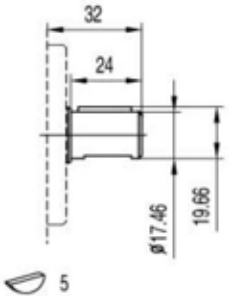


P11

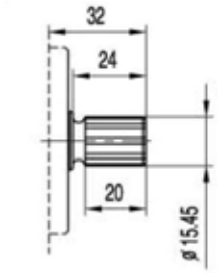


DP16/32-30° -9T

J5

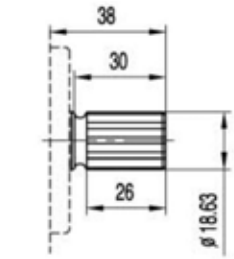


DP16/32-30° -11T

J6

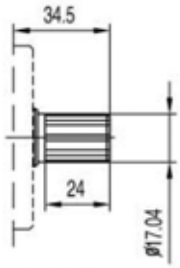


DP16/32-30° -10T

J7

# KGP2[KAP2]

## PORTS

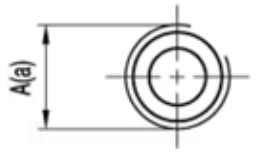


L4/L5/L6/L8

| TYPE | CODE | INLET | OUTLET |
|---|---|---|---|
| | | A | a |
| KG(A)P2..3 ~ KG(A)P2..6 | L4 | G1/2 | G1/2 |
| KG(A)P2..8 ~ KG(A)P2..30 | L5 | G3/4 | G1/2 |
| KG(A)P2..8 ~ KG(A)P2..30 | L6 | G3/4 | G3/4 |
| KG(A)P2..16 ~ KG(A)P2..30 | L8 | G1 | G3/4 |

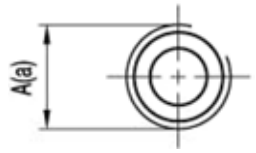


N2/N3/N5

| TYPE | CODE | INLET | OUTLET |
|---|---|---|---|
| | | A | a |
| KG(A)P2..3 ~ KG(A)P2..12 | N2 | PT1/2 | PT1/2 |
| KG(A)P2..14 ~ KG(A)P2..25 | N3 | PT3/4 | PT1/2 |
| KG(A)P2..28 ~ KG(A)P2..30 | N5 | PT1 | PT3/4 |

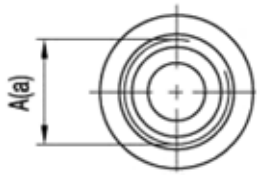


U2/U4/U6/U7

| TYPE | CODE | INLET | OUTLET |
|---|---|---|---|
| | | A | a |
| KG(A)P2..3 ~ KG(A)P2..28 | U2 | 7/8-14UNF | 3/4-16UNF |
| KG(A)P2..3 ~ KG(A)P2..28 | U4 | 1 1/16-12UNF | 7/8-14UNF |
| KG(A)P2..30 | U6 | 1 5/16-12UNF | 7/8-14UNF |
| KG(A)P2..8 ~ KGP(A)2..30 | U7 | 1 5/16-12UNF | 1 1/16-12UNF |

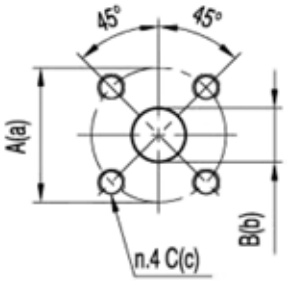


F30/F31/F35

| TYPE | CODE | INLET | | | OUTLET | | |
|---|---|---|---|---|---|---|---|
| | | A | B | C | a | b | c |
| KG(A)P2..3 ~ KG(A)P2..8 | F30 | 40 | 15 | M6 | 35 | 15 | M6 |
| KG(A)P2..10 ~ KG(A)P2..30 | F31 | 40 | 20 | M6 | 35 | 15 | M6 |
| KG(A)P2..16 ~ KG(A)P2..30 | F35 | 55 | 26 | M8 | 55 | 18 | M8 |

# KGP2[KAP2]

## PORTS

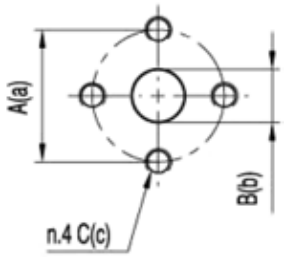


F2/F9/F12

| TYPE | CODE | INLET | | | OUTLET | | |
|---|---|---|---|---|---|---|---|
| | | A | B | C | a | b | c |
| KG(A)P2..3 ～ KG(A)P2..8 | F2 | 30 | 13 | M6 | 30 | 13 | M6 |
| KG(A)P2..10 ～ KG(A)P2..22 | F9 | 40 | 20 | M8 | 30 | 13 | M6 |
| KG(A)P2..25 ～ KG(A)P2..30 | F12 | 40 | 22 | M8 | 30 | 13 | M6 |

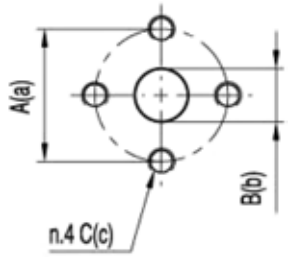


F3/F4/F5

| TYPE | CODE | INLET | | | OUTLET | | |
|---|---|---|---|---|---|---|---|
| | | A | B | C | a | b | c |
| KG(A)P2..3 ～ KG(A)P2..8 | F3 | 38 | 14 | M8 | 38 | 10 | M8 |
| KG(A)P2..10 ～ KG(A)P2..22 | F4 | 38 | 18 | M8 | 38 | 15 | M8 |
| KG(A)P2..25 ～ KG(A)P2..30 | F5 | 38 | 20 | M8 | 38 | 15 | M8 |

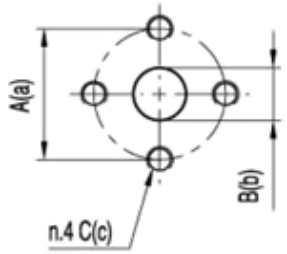


F6/F7/F8/F11

| TYPE | CODE | INLET | | | OUTLET | | |
|---|---|---|---|---|---|---|---|
| | | A | B | C | a | b | c |
| KG(A)P2..8 ～ KG(A)P2..10 | F6 | 40 | 13 | M8 | 40 | 13 | M8 |
| KG(A)P2..12 ～ KG(A)P2..20 | F7 | 40 | 19 | M8 | 40 | 13 | M8 |
| KG(A)P2..22 ～ KG(A)P2..28 | F8 | 40 | 19 | M8 | 40 | 19 | M8 |
| KG(A)P2..30 | F11 | 40 | 21 | M8 | 40 | 19 | M8 |

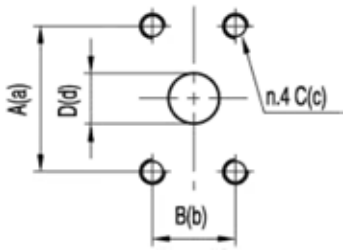


F60/F61/F62

| TYPE | CODE | INLET | | | | OUTLET | | | |
|---|---|---|---|---|---|---|---|---|---|
| | | A | B | C | D | a | b | c | d |
| KG(A)P2..3 ～ KG(A)P2..16 | F60 | 38.1 | 17.48 | 5/16-18UNC | 13 | 38.1 | 17.48 | 5/16-18UNC | 13 |
| KG(A)P2..18 ～ KG(A)P2..20 | F61 | 47.63 | 22.23 | 3/8-16UNC | 20 | 38.1 | 17.48 | 5/16-18UNC | 13 |
| KG(A)P2..22 ～ KG(A)P2..30 | F62 | 47.63 | 22.23 | 3/8-16UNC | 20 | 47.63 | 22.23 | 3/8-16UNC | 20 |

# KGP2[KAP2]

## OPTIONS

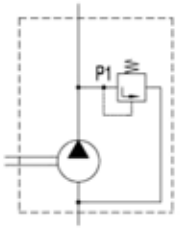


X2

| DISCRIPTION |
| --- |
| Pressure relief valve with internal drain ; setting pressure between 5 and 250 bar . |

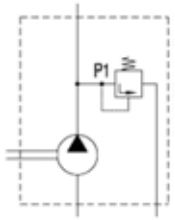


Y1

| DISCRIPTION |
| --- |
| Pressure relief valve with external drain ; setting pressure between 5 and 250 bar . |

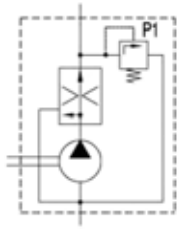


W0/W1

| DISCRIPTION |
| --- |
| 3-way flow control valve with pressure relief valve ; excess flow returned to suction ; setting pressure between 100 and 180 bar ; control flow between 2 and 30 L/min . |

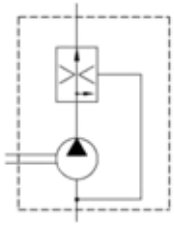

K0

| DISCRIPTION |
| --- |
| 2-way flow control valve ; excess flow returned to suction ; control flow between 2 and 30 L/min . |

# KDP2.5

## HOW TO ORDER

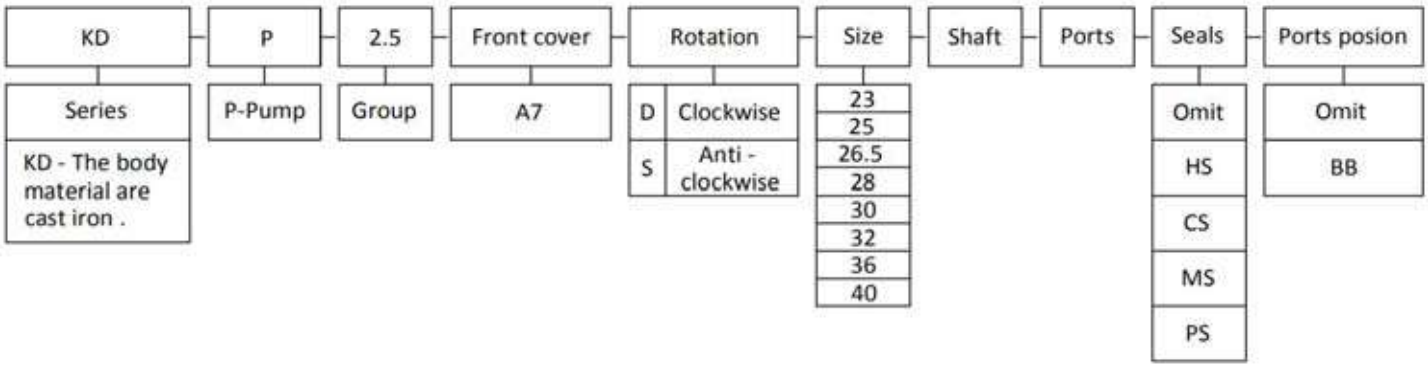


Seals

Omit - Range between -10℃and +80℃， inlet pressure up to max. 3 bar absolute ( standard seal ) .

HS - Version suitable for fluid at hi-temperatures , range between -10℃and +120℃ .

CS - Version suitable for fluid at low-temperatures , range between -40℃and +80℃ .

MS - Version suitable for inlet pressure up to max. 3 and 6 bar absolute .

PS - Version suitable for inlet pressure up to max. 3 and 10 bar absolute .

Ports position

Omit - Side inlet and side outlet .

BB - Back inlet and back outlet .

## Examples

KDP2.5A7-D-32H2L7-BB = KA series , 2.5 group pump , A7 front cover , Clockwise , 32 cc/rev , H2 shaft , L7 ports , standard seal , Back inlet and back outlet .

# KDP2.5A7-BB

★ Use axial gap automatic compensation mechanism.

★ High sustained working pressure and long service life .

★ Anti fouling ability is strong and suitable for forklift , power units , machines and other Kinds of hydraulic systems .

**OUTLET** **INLET**

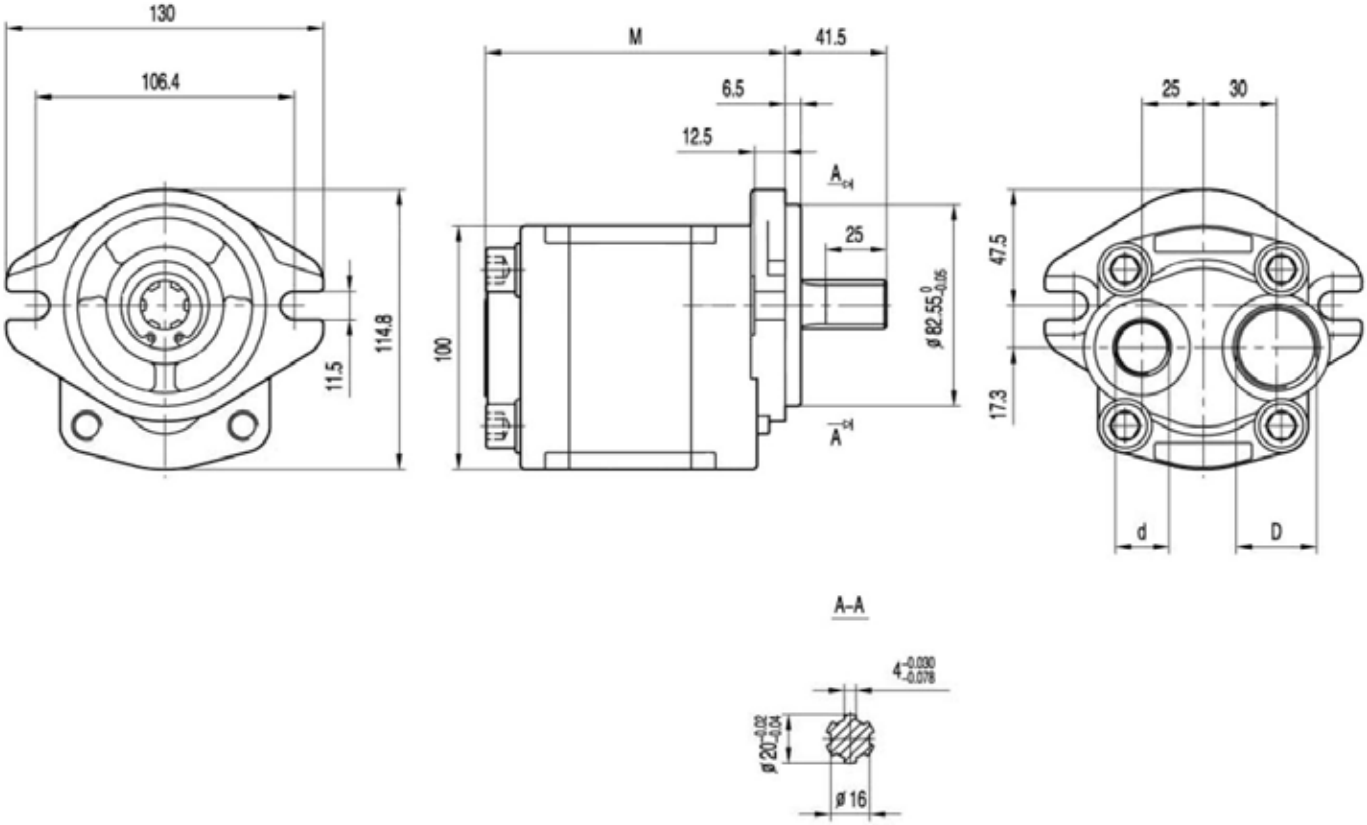


| Type | Displacement | Max. pressure | | | Max. speed | Min. speed | Dimensions | | |
|---|---|---|---|---|---|---|---|---|---|
| | | P1 | P2 | P3 | | | M | D | d |
| | ($cm^3$/rev) | bar | bar | bar | (r/min) | (r/min) | mm | mm | mm |
| KDP2.5A7-D-23-BB | 23 | 200 | 225 | 250 | 3500 | 600 | 118 | G1 | G1/2 |
| KDP2.5A7-D-25-BB | 25 | 200 | 225 | 250 | 3500 | 600 | 120 | G1 | G1/2 |
| KDP2.5A7-D-26.5-BB | 26.5 | 200 | 225 | 250 | 3500 | 600 | 122 | G1 | G1/2 |
| KDP2.5A7-D-28-BB | 28 | 200 | 225 | 250 | 3500 | 600 | 124 | G1 | G1/2 |
| KDP2.5A7-D-30-BB | 30 | 200 | 225 | 250 | 3000 | 600 | 126 | G1 | G1/2 |
| KDP2.5A7-D-32-BB | 32 | 200 | 225 | 250 | 3000 | 600 | 129 | G1 | G1/2 |
| KDP2.5A7-D-36-BB | 36 | 200 | 225 | 250 | 2750 | 500 | 133 | G1 | G1/2 |
| KDP2.5A7-D-40-BB | 40 | 160 | 180 | 200 | 2500 | 500 | 138 | G1 | G1/2 |

# KDP2.5A7

★ Use axial gap automatic compensation mechanism.

★ High sustained working pressure and long service life .

★ Anti fouling ability is strong and suitable for forklift , power units , machines and other Kinds of hydraulic systems .

**OUTLET** **INLET**

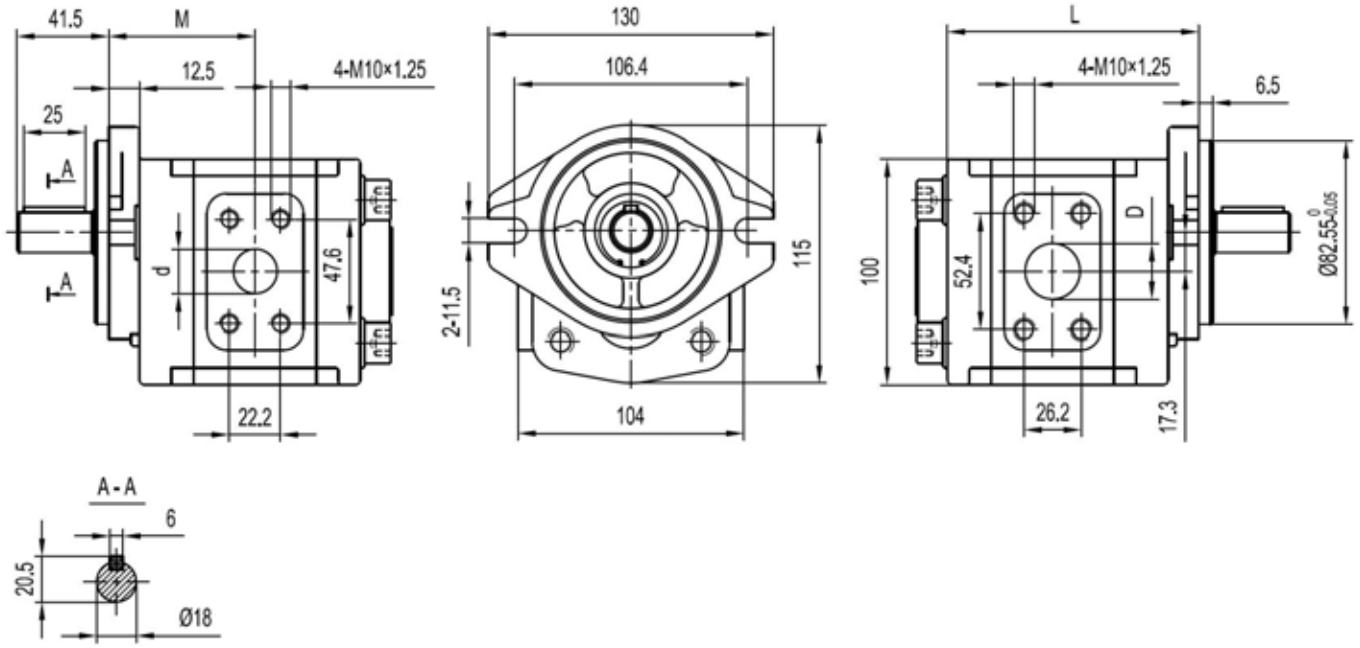


| Type | Displacement | Max. pressure | | | Max. speed | Min. speed | Dimensions | | | |
|---|---|---|---|---|---|---|---|---|---|---|
| | | P1 | P2 | P3 | | | M | L | D | d |
| | ($cm^3$/rev) | bar | bar | bar | (r/min) | (r/min) | mm | mm | mm | mm |
| KDP2.5A7-D-23 | 23 | 200 | 225 | 250 | 3500 | 600 | 60.5 | 118 | G1 | G1/2 |
| KDP2.5A7-D-25 | 25 | 200 | 225 | 250 | 3500 | 600 | 61.8 | 120 | G1 | G1/2 |
| KDP2.5A7-D-26.5 | 26.5 | 200 | 225 | 250 | 3500 | 600 | 62.8 | 122 | G1 | G1/2 |
| KDP2.5A7-D-28 | 28 | 200 | 225 | 250 | 3500 | 600 | 63.8 | 124 | G1 | G1/2 |
| KDP2.5A7-D-30 | 30 | 200 | 225 | 250 | 3000 | 600 | 64.8 | 126 | G1 | G1/2 |
| KDP2.5A7-D-32 | 32 | 200 | 225 | 250 | 3000 | 600 | 66.3 | 129 | G1 | G1/2 |
| KDP2.5A7-D-36 | 36 | 200 | 225 | 250 | 2750 | 500 | 68.3 | 133 | G1 | G1/2 |
| KDP2.5A7-D-40 | 40 | 160 | 180 | 200 | 2500 | 500 | 70.8 | 138 | G1 | G1/2 |

# KDP2.5

FRONT COVER

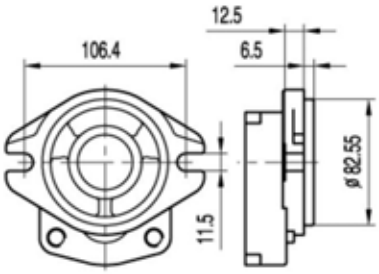


A7

SHAFTS

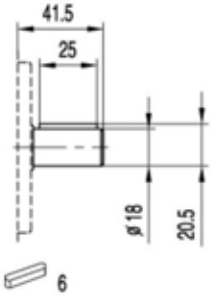


P17

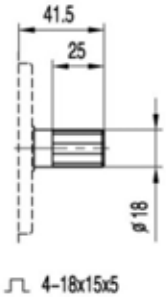


H2

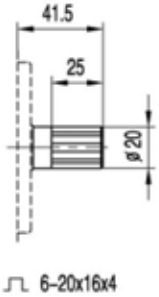


H3

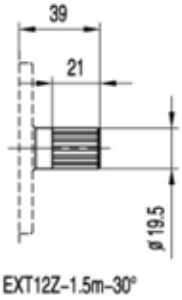


J13

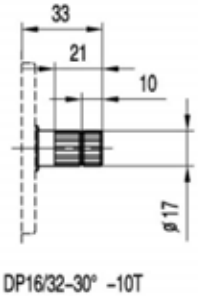


J14

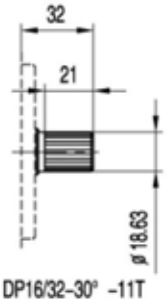


J15

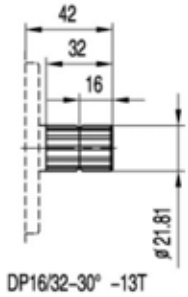


J16

# KDP2.5

## PORTS

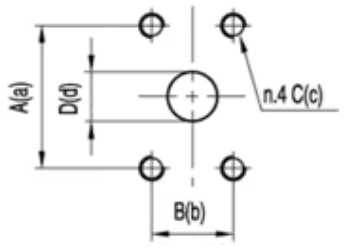


F65/F67

| TYPE | CODE | INLET | | | | OUTLET | | | |
|---|---|---|---|---|---|---|---|---|---|
| | | A | B | C | D | a | b | c | d |
| KDP2.5..23 ～ KDP2.5..36 | F65 | 52.4 | 26.2 | M10×1.25 | 25 | 47.6 | 22.2 | M10×1.25 | 20 |
| KDP2.5..40 | F67 | 52.4 | 26.2 | M10×1.25 | 28 | 47.6 | 22.2 | M10×1.25 | 20 |

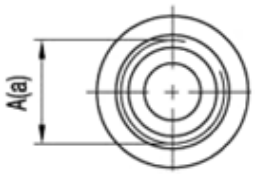


L7

| TYPE | CODE | INLET | OUTLET |
|---|---|---|---|
| | | A | a |
| KDP2.5..23 ～ KDP2.5..40 | L7 | G1 | G1/2 |

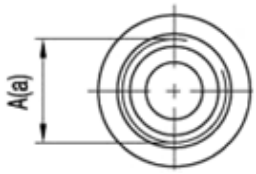


M16

| TYPE | CODE | INLET | OUTLET |
|---|---|---|---|
| | | A | a |
| KDP2.5..23 ～ KDP2.5..40 | M16 | M33×2 | M22×1.5 |

# KGP3

## HOW TO ORDER

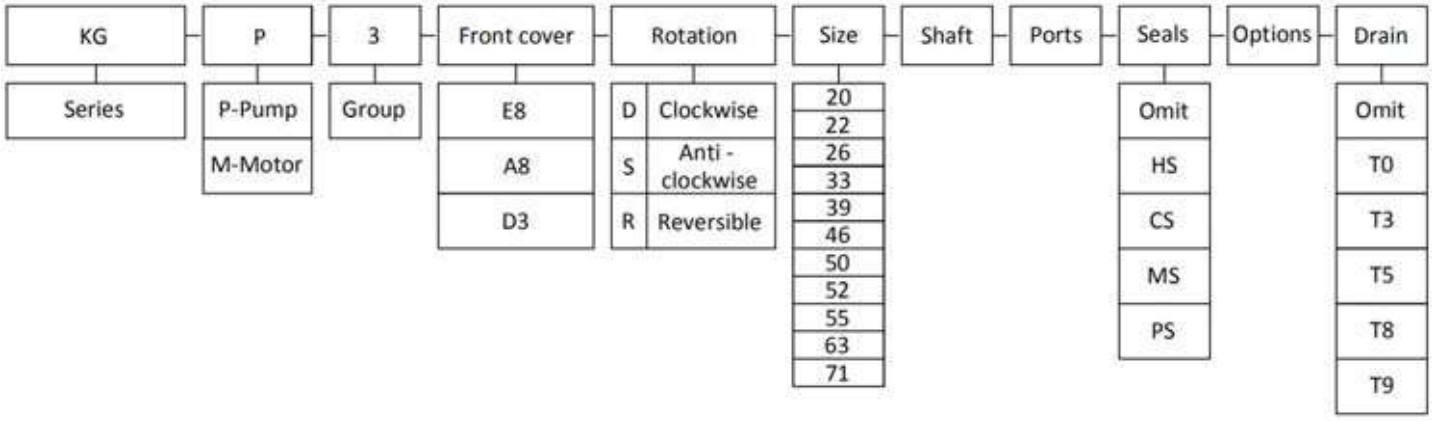


Seals

Omit - Range between -10℃and +80℃， inlet pressure up to max. 3 bar absolute ( standard seal ) .

HS - Version suitable for fluid at hi-temperatures , range between -10℃and +120℃ .

CS - Version suitable for fluid at low-temperatures , range between -40℃and +80℃ .

MS - Version suitable for inlet pressure up to max. 3 and 6 bar absolute .

PS - Version suitable for inlet pressure up to max. 3 and 10 bar absolute .

Drain

Omit - Have no drain .

T0 - Internal drain .

T3 - External drain G1/4 .

T5 - External drain 9/18-18 UNF .

T8 - External drain G3/8 .

T9 - External drain 3/4-16 UNF .

## Examples

KGP3E8-D-33Z9F14 = KG series , 3 group pump , E8 front cover , clockwise , 33 cc/rev , Z9 shaft , F14 ports , standard seal , side inlet and side outlet .

# KGP3E8

★ Use axial gap automatic compensation mechanism.

★ High sustained working pressure and long service life .

★ Anti fouling ability is strong and suitable for tractors , power units , machines and other kinds Of hydraulic systems .

**OUTLET** **INLET**

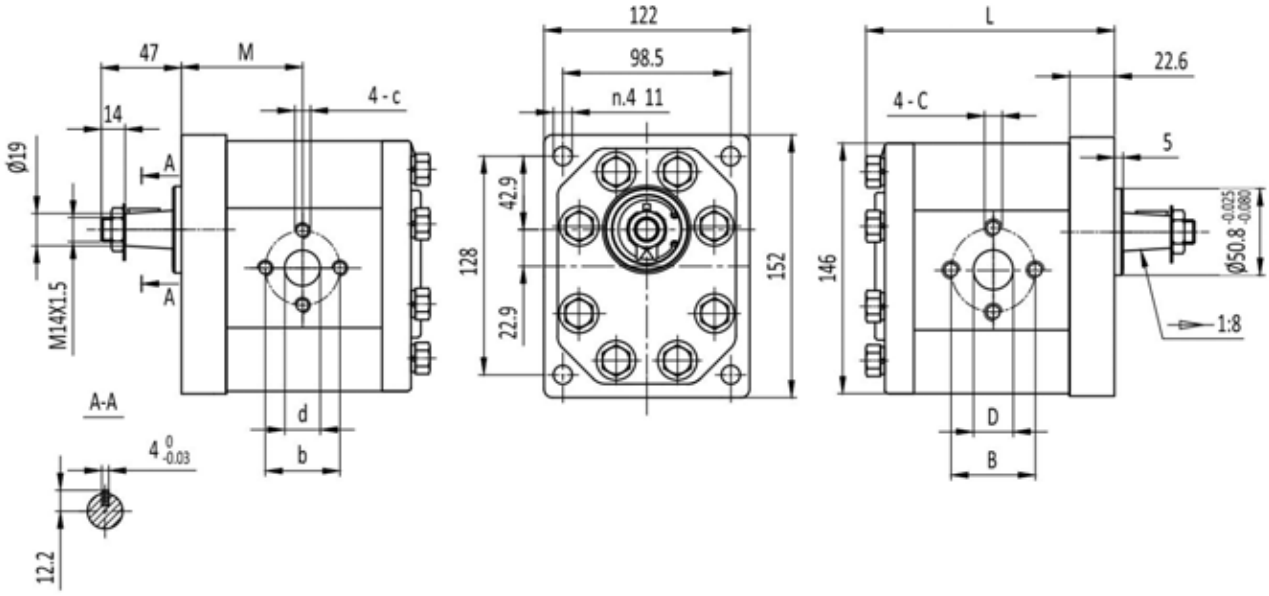


| Type | Displacement | Max. pressure | | | Max. | Min. | Dimensions | | | | | | | |
|---|---|---|---|---|---|---|---|---|---|---|---|---|---|---|
| | | P1 | P2 | P3 | speed | speed | L | M | B | D | C | b | d | c |
| | ($cm^3$/rev) | bar | bar | bar | (r/min) | (r/min) | mm | mm | mm | mm | | mm | mm | |
| KGP3E8-D-20 | 20 | 200 | 225 | 250 | 3500 | 600 | 128 | 63 | 40 | 19 | M8 | 40 | 19 | M8 |
| KGP3E8-D-22 | 22 | 200 | 225 | 250 | 3500 | 600 | 130 | 64 | 40 | 19 | M8 | 40 | 19 | M8 |
| KGP3E8-D-26 | 26 | 200 | 225 | 250 | 3000 | 600 | 133 | 65 | 40 | 19 | M8 | 40 | 19 | M8 |
| KGP3E8-D-33 | 33 | 200 | 225 | 250 | 3000 | 500 | 139 | 68 | 51 | 27 | M10 | 40 | 19 | M8 |
| KGP3E8-D-39 | 39 | 200 | 225 | 250 | 3000 | 500 | 146 | 72 | 51 | 27 | M10 | 40 | 19 | M8 |
| KGP3E8-D-46 | 46 | 200 | 225 | 250 | 3000 | 500 | 152 | 75 | 51 | 27 | M10 | 40 | 19 | M8 |
| KGP3E8-D-50 | 50 | 200 | 225 | 250 | 3000 | 500 | 156 | 77 | 51 | 27 | M10 | 40 | 19 | M8 |
| KGP3E8-D-52 | 52 | 200 | 225 | 250 | 3000 | 500 | 158 | 78 | 51 | 27 | M10 | 40 | 19 | M8 |
| KGP3E8-D-55 | 55 | 200 | 230 | 250 | 2800 | 400 | 160 | 79 | 51 | 27 | M10 | 40 | 19 | M8 |
| KGP3E8-D-63 | 63 | 200 | 230 | 250 | 2800 | 400 | 168 | 83 | 62 | 33 | M10 | 51 | 27 | M10 |
| KGP3E8-D-71 | 71 | 180 | 200 | 220 | 2500 | 400 | 175 | 86 | 62 | 33 | M10 | 51 | 27 | M10 |

# KGP3A8

★ Use axial gap automatic compensation mechanism.

★ High sustained working pressure and long service life .

★ Anti fouling ability is strong and suitable for tractors , power units , machines and other kinds 0f hydraulic systems .

**OUTLET** **INLET**

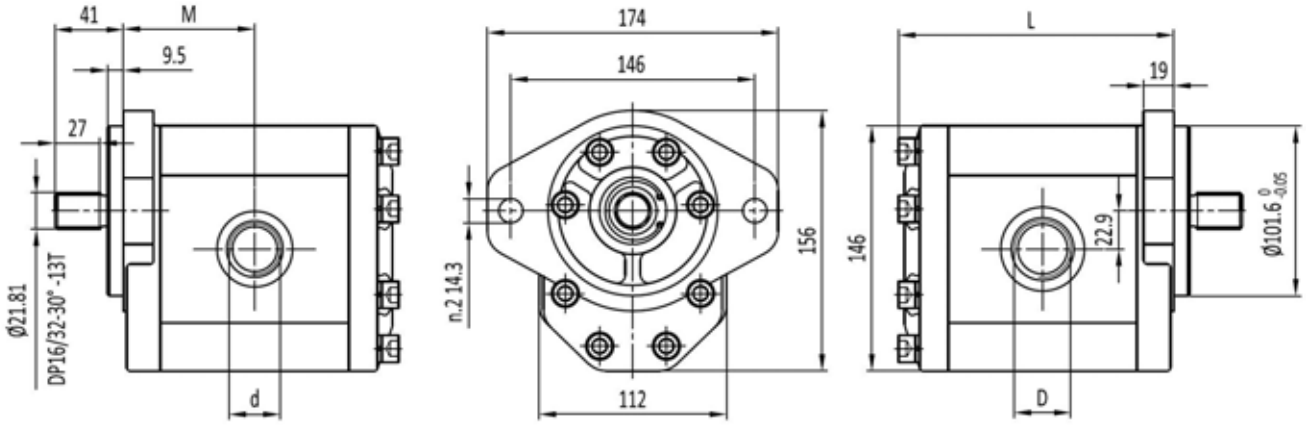


| Type | Displacement | Max. pressure | | | Max. | Min. | Dimensions | | | |
|---|---|---|---|---|---|---|---|---|---|---|
| | | P1 | P2 | P3 | speed | speed | L | M | D | d |
| | ($cm^3$/rev) | bar | bar | bar | (r/min) | (r/min) | mm | mm | | |
| KGP3A8-D-20 | 20 | 200 | 225 | 250 | 3500 | 600 | 128 | 63 | G3/4 | G3/4 |
| KGP3A8-D-22 | 22 | 200 | 225 | 250 | 3500 | 600 | 130 | 64 | G3/4 | G3/4 |
| KGP3A8-D-26 | 26 | 200 | 225 | 250 | 3000 | 600 | 133 | 65 | G1 | G3/4 |
| KGP3A8-D-33 | 33 | 200 | 225 | 250 | 3000 | 500 | 139 | 68 | G1 | G3/4 |
| KGP3A8-D-39 | 39 | 200 | 225 | 250 | 3000 | 500 | 146 | 72 | G1 | G3/4 |
| KGP3A8-D-46 | 46 | 200 | 225 | 250 | 3000 | 500 | 152 | 75 | G1 1/4 | G1 |
| KGP3A8-D-50 | 50 | 200 | 225 | 250 | 3000 | 500 | 156 | 77 | G1 1/4 | G1 |
| KGP3A8-D-52 | 52 | 200 | 225 | 250 | 3000 | 500 | 158 | 78 | G1 1/4 | G1 |
| KGP3A8-D-55 | 55 | 200 | 230 | 250 | 2800 | 400 | 160 | 79 | G1 1/4 | G1 |
| KGP3A8-D-63 | 63 | 200 | 230 | 250 | 2800 | 400 | 168 | 83 | G1 1/4 | G1 |
| KGP3A8-D-71 | 71 | 180 | 200 | 220 | 2500 | 400 | 175 | 86 | G1 1/2 | G1 1/4 |

# KGM3E8

★ Use axial gap automatic compensation mechanism.

★ High sustained working pressure and long service life .

★ Anti fouling ability is strong and suitable for tractors , power units , machines and other kinds 0f hydraulic systems .

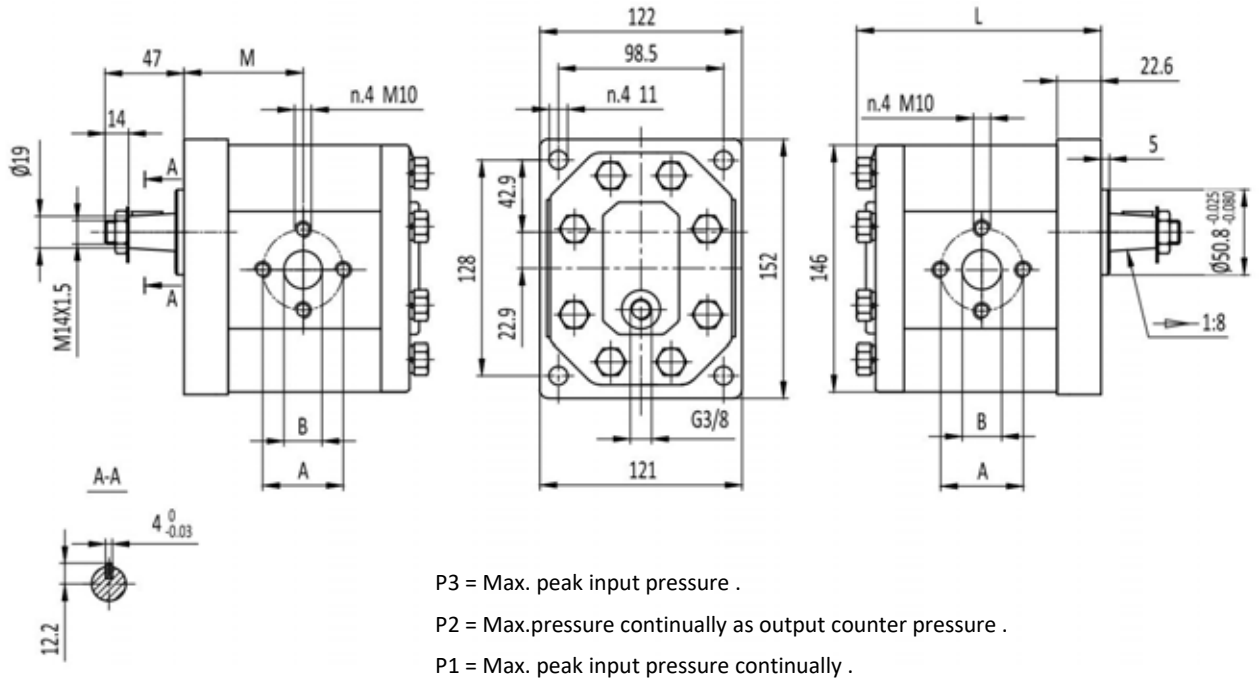


P3 = Max. peak input pressure .

P2 = Max.pressure continually as output counter pressure .

P1 = Max. peak input pressure continually .

| Type | Displacement | Max. pressure | | | Max. | Min. | Dimensions | | | |
|---|---|---|---|---|---|---|---|---|---|---|
| | | P1 | P2 | P3 | speed | speed | L | M | A | B |
| | ($cm^3$/rev) | bar | bar | bar | (r/min) | (r/min) | mm | mm | | |
| KGM3E8-R-20-T8 | 20 | 200 | 225 | 250 | 3500 | 600 | 128 | 63 | 56 | 27 |
| KGM3E8-R-22-T8 | 22 | 200 | 225 | 250 | 3500 | 600 | 130 | 64 | 56 | 27 |
| KGM3E8-R-26-T8 | 26 | 200 | 225 | 250 | 3000 | 600 | 133 | 65 | 56 | 27 |
| KGM3E8-R-33-T8 | 33 | 200 | 225 | 250 | 3000 | 500 | 139 | 68 | 56 | 27 |
| KGM3E8-R-39-T8 | 39 | 200 | 225 | 250 | 3000 | 500 | 146 | 72 | 56 | 27 |
| KGM3E8-R-46-T8 | 46 | 200 | 225 | 250 | 3000 | 500 | 152 | 75 | 51 | 27 |
| KGM3E8-R-50-T8 | 50 | 200 | 225 | 250 | 3000 | 500 | 156 | 77 | 56 | 27 |
| KGM3E8-R-52-T8 | 52 | 200 | 225 | 250 | 3000 | 500 | 158 | 78 | 56 | 27 |
| KGM3E8-R-55-T8 | 55 | 200 | 230 | 250 | 2800 | 400 | 160 | 79 | 62 | 33 |
| KGM3E8-R-63-T8 | 63 | 200 | 230 | 250 | 2800 | 400 | 168 | 83 | 62 | 33 |
| KGM3E8-R-71-T8 | 71 | 180 | 200 | 220 | 2500 | 400 | 175 | 86 | 62 | 33 |

# KGP3D3

★ Use axial gap automatic compensation mechanism.

★ High sustained working pressure and long service life .

★ Anti fouling ability is strong and suitable for tractors , power units , machines and other kinds 0f hydraulic systems .

**OUTLET** **INLET**

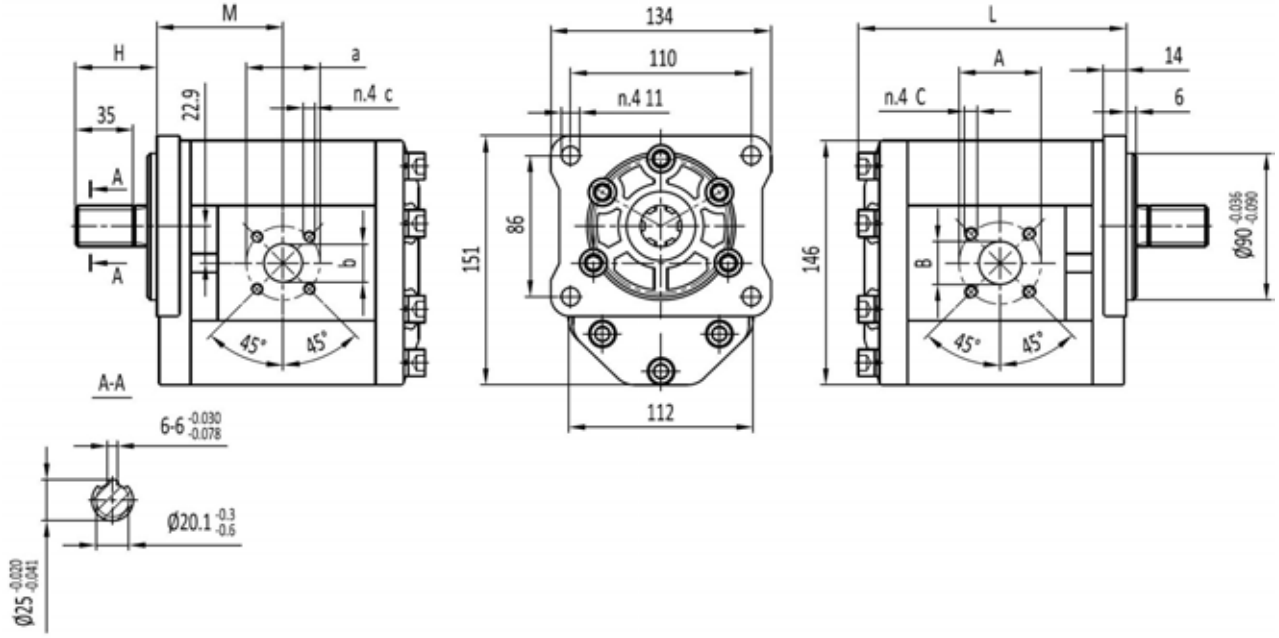


| Type | Displacement | Max. pressure | | | Max. speed | Min. speed | Dimensions | | | | | | | | |
|---|---|---|---|---|---|---|---|---|---|---|---|---|---|---|---|
| | | P1 | P2 | P3 | | | L | M | H | A | B | a | b | C | c |
| | ($cm^3$/rev) | bar | bar | bar | (r/min) | (r/min) | mm | | | | | | | | |
| KGP3D3-D-20 | 20 | 200 | 225 | 250 | 3500 | 600 | 128 | 63 | 48 | 50 | 20 | 50 | 16.5 | M8 | M8 |
| KGP3D3-D-22 | 22 | 200 | 225 | 250 | 3500 | 600 | 130 | 64 | 48 | 50 | 20 | 50 | 16.5 | M8 | M8 |
| KGP3D3-D-26 | 26 | 200 | 225 | 250 | 3000 | 600 | 133 | 65 | 48 | 50 | 20 | 50 | 20 | M8 | M8 |
| KGP3D3-D-33 | 33 | 200 | 225 | 250 | 3000 | 500 | 139 | 68 | 48 | 65 | 25 | 65 | 20 | M8 | M8 |
| KGP3D3-D-39 | 39 | 200 | 225 | 250 | 3000 | 500 | 146 | 72 | 48 | 65 | 25 | 65 | 20 | M8 | M8 |
| KGP3D3-D-46 | 46 | 200 | 225 | 250 | 3000 | 500 | 152 | 75 | 48 | 65 | 25 | 65 | 20 | M8 | M8 |
| KGP3D3-D-50 | 50 | 200 | 225 | 250 | 3000 | 500 | 156 | 77 | 51 | 76 | 33 | 76 | 25 | M10 | M10 |
| KGP3D3-D-52 | 52 | 200 | 225 | 250 | 3000 | 500 | 158 | 78 | 51 | 76 | 33 | 76 | 25 | M10 | M10 |
| KGP3D3-D-55 | 55 | 200 | 230 | 250 | 2800 | 400 | 160 | 79 | 51 | 76 | 33 | 76 | 25 | M10 | M10 |
| KGP3D3-D-63 | 63 | 200 | 230 | 250 | 2800 | 400 | 168 | 83 | 51 | 76 | 33 | 76 | 25 | M10 | M10 |
| KGP3D3-D-71 | 71 | 180 | 200 | 220 | 2500 | 400 | 175 | 86 | 51 | 76 | 33 | 76 | 25 | M10 | M10 |

# KGP3

## FRONT COVER

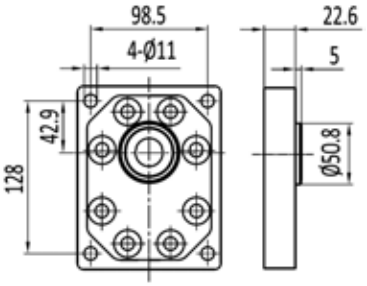


E8

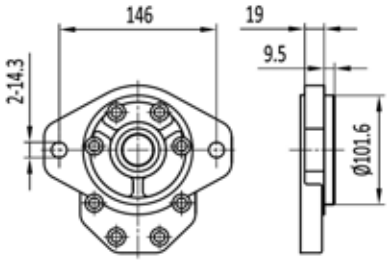


A8

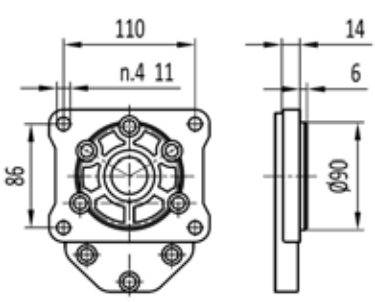


D3

## SHAFTS

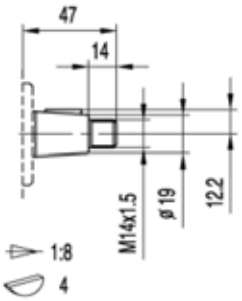


Z9

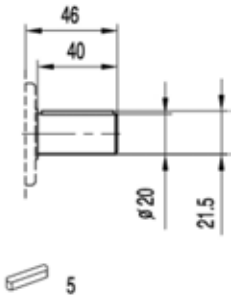


P21

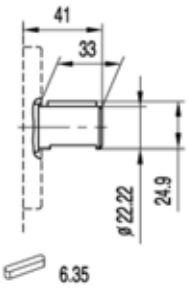


P16

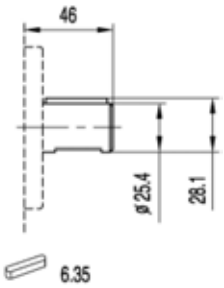


P20

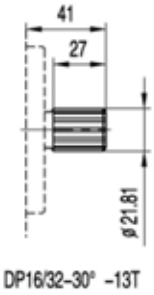


J17

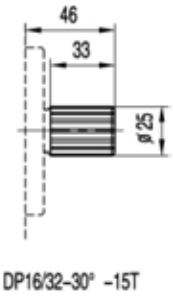


J18

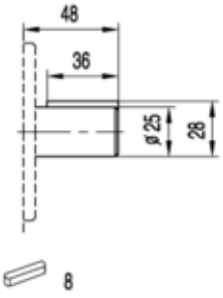


P18

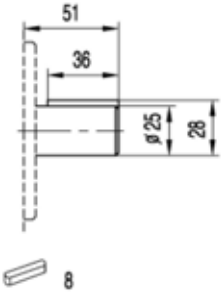


P19

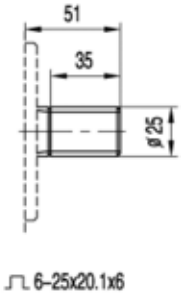


H5

# KGP3

## PORTS

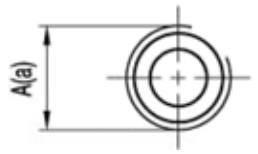


L6/L8/L10/L12

| TYPE | CODE | INLET | OUTLET |
|---|---|---|---|
| | | A | a |
| KGP3..20 ~ KGP3..22 | L6 | G3/4 | G3/4 |
| KGP3..26 ~ KGP3..39 | L8 | G1 | G3/4 |
| KGP3..46 ~ KGP3..63 | L10 | G1 1/4 | G1 |
| KGP3..71 | L12 | G1 1/2 | G1 1/4 |

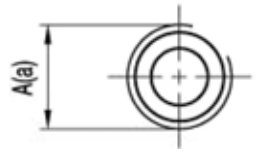


N4/N5/N7/N9

| TYPE | CODE | INLET | OUTLET |
|---|---|---|---|
| | | A | a |
| KGP3..20 ~ KGP3..22 | N4 | PT3/4 | PT3/4 |
| KGP3..26 ~ KGP3..39 | N5 | PT1 | PT3/4 |
| KGP3..46 ~ KGP3..63 | N7 | PT1 1/4 | PT1 |
| KGP3..71 | N9 | PT1 1/2 | PT1 1/4 |

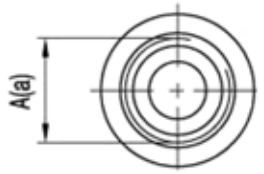


U7/U9/U10

| TYPE | CODE | INLET | OUTLET |
|---|---|---|---|
| | | A | a |
| KGP3..20 ~ KGP3..33 | U7 | 1 5/16-12UNF | 1 1/16-12UNF |
| KGP3..39 ~ KGP3..52 | U9 | 1 5/8-12UNF | 1 1/16-12UNF |
| KGP3..55 ~ KGP3..71 | U10 | 1 7/8-12UNF | 1 5/16-12UNF |

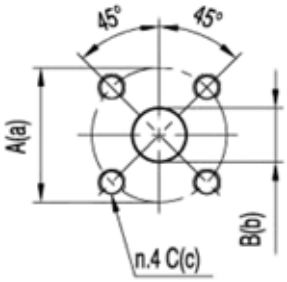


F32/F36/F37/F38/F39

| TYPE | CODE | INLET | | | OUTLET | | |
|---|---|---|---|---|---|---|---|
| | | A | B | C | a | b | c |
| KGP3..20 ~ KGP3..26 | F32 | 50 | 20 | M8 | 50 | 20 | M8 |
| KGP3..20 ~ KGP3..71 | F36 | 55 | 27 | M8 | 55 | 19 | M8 |
| KGP3..33 ~ KGP3..46 | F37 | 65 | 25 | M8 | 65 | 20 | M8 |
| KGP3..50 ~ KGP3..63 | F38 | 76 | 33 | M8 | 76 | 25 | M8 |
| KGP3..50 ~ KGP3..71 | F39 | 76 | 33 | M10 | 76 | 25 | M10 |

# KGP3

## PORTS

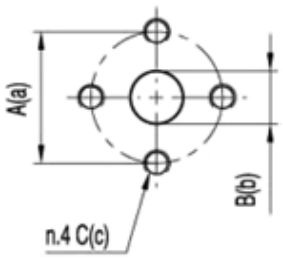


F8/F14/F15/F16/F17/F18

| TYPE | CODE | INLET | | | OUTLET | | |
|---|---|---|---|---|---|---|---|
| | | A | B | C | a | b | c |
| KGP3..20 ～ KGP3..26 | F 8 | 40 | 19 | M8 | 40 | 19 | M8 |
| KGP3..33 ～ KGP3..55 | F14 | 51 | 27 | M10 | 40 | 19 | M8 |
| KGP3..20 ～ KGP3..39 | F16 | 56 | 27 | M10 | 56 | 19 | M10 |
| KGP3..46 | F15 | 51 | 27 | M10 | 51 | 27 | M10 |
| KGP3..50 ～ KGP3..52 | F17 | 56 | 27 | M10 | 56 | 27 | M10 |
| KGP3..55 ～ KGP3..71 | F18 | 62 | 33 | M10 | 51 | 27 | M10 |

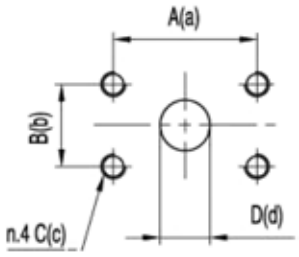


F84/F85/F86/F87

| TYPE | CODE | INLET | | | | OUTLET | | | |
|---|---|---|---|---|---|---|---|---|---|
| | | A | B | C | D | a | b | c | d |
| KGP3..20 ～ KGP3..25 | F84 | 57.2 | 26 | M10 | 25 | 57.2 | 26 | M10 | 20 |
| KGP3..32 | F85 | 57.2 | 26 | M10 | 30 | 57.2 | 26 | M10 | 20 |
| KGP3..40 | F86 | 57.2 | 26 | M10 | 35 | 57.2 | 26 | M10 | 20 |
| KGP3..50 ～ KGP3..63 | F87 | 57.2 | 26 | M10 | 35 | 57.2 | 26 | M10 | 25 |

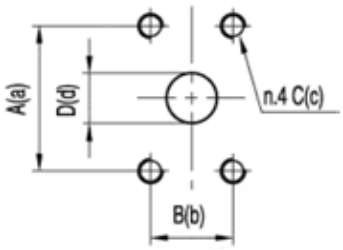


F66/F68

| TYPE | CODE | INLET | | | | OUTLET | | | |
|---|---|---|---|---|---|---|---|---|---|
| | | A | B | C | D | a | b | c | d |
| KGP3..20 ～ KGP3..52 | F66 | 52.4 | 26.2 | 3/8-16UNC | 27 | 47.6 | 22.2 | 3/8-16UNC | 19 |
| KGP3..55 ～ KGP3..71 | F68 | 58.7 | 30.2 | 7/16-14UNC | 33 | 52.4 | 26.2 | 3/8-16UNC | 27 |

# KAP1/1[HLP1/1]

## HOW TO ORDER

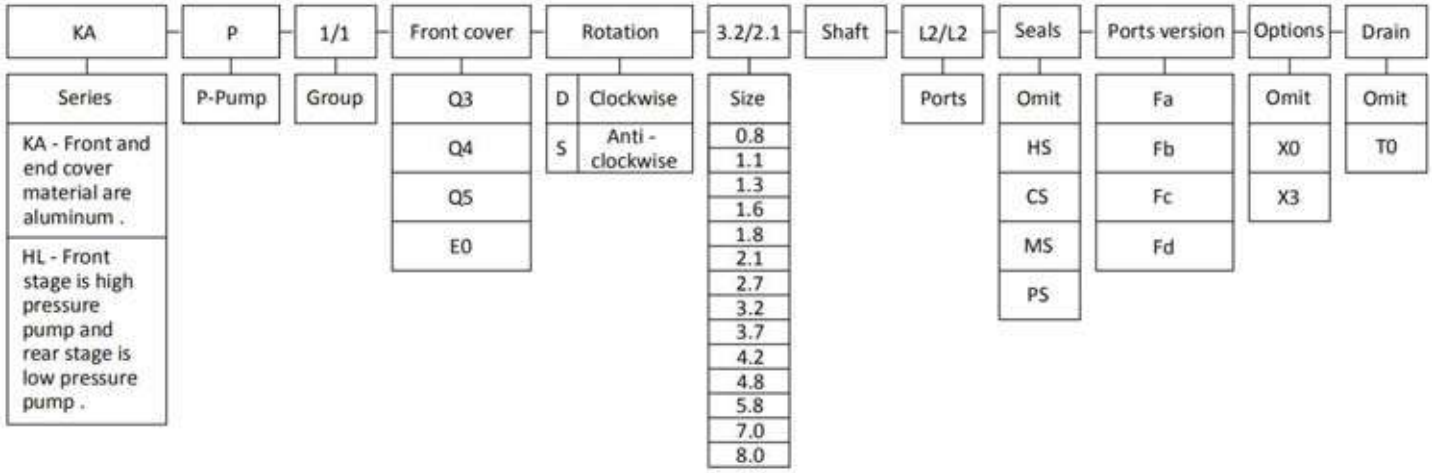


**Remark** : choose the shaft and ports can accord the types of " KAP1 " series ; and if you have other types , please contact us .

### Seals

Omit - Range between -10℃and +80℃， inlet pressure up to max. 3 bar absolute ( standard seal ) .

HS - Version suitable for fluid at hi-temperatures , range between -10℃and +120℃ .

CS - Version suitable for fluid at low-temperatures , range between -40℃and +80℃ .

MS - Version suitable for inlet pressure up to max. 3 and 6 bar absolute .

PS - Version suitable for inlet pressure up to max. 3 and 10 bar absolute .

### Ports version

Fa - two inlet and two outlet ( separated type ) .

Fb - two inlet and two outlet ( common type ) .

Fc - one inlet and two outlet ( inlet on the front pump ) .

Fd - one inlet and one outlet ( only for " HL " series ) .

### Options

Omit - Have no valve .

X0 - pressure valve .

X3 - special integrated valve .

### Drain

Omit - Have no drain .

T0 - Internal drain .

## Examples

KAP1/1E0-D-2.1/4.2Z1L2/L2-Fa = KA series , 1/1 group tandem pump , E0 front cover , Clockwise , 2.1 and 4.1 cc/rev , Z1 shaft , L2 and L2 ports , standard seal , two inlet and two outlet ( separated type ) .

# KAP1/1E0-Fa

- ★ Use axial gap automatic compensation mechanism.
- ★ High sustained working pressure and long service life .
- ★ Anti fouling ability is strong and suitable for power units,machines and other kinds Of hydraulic systems .

**OUTLET** **INLET**

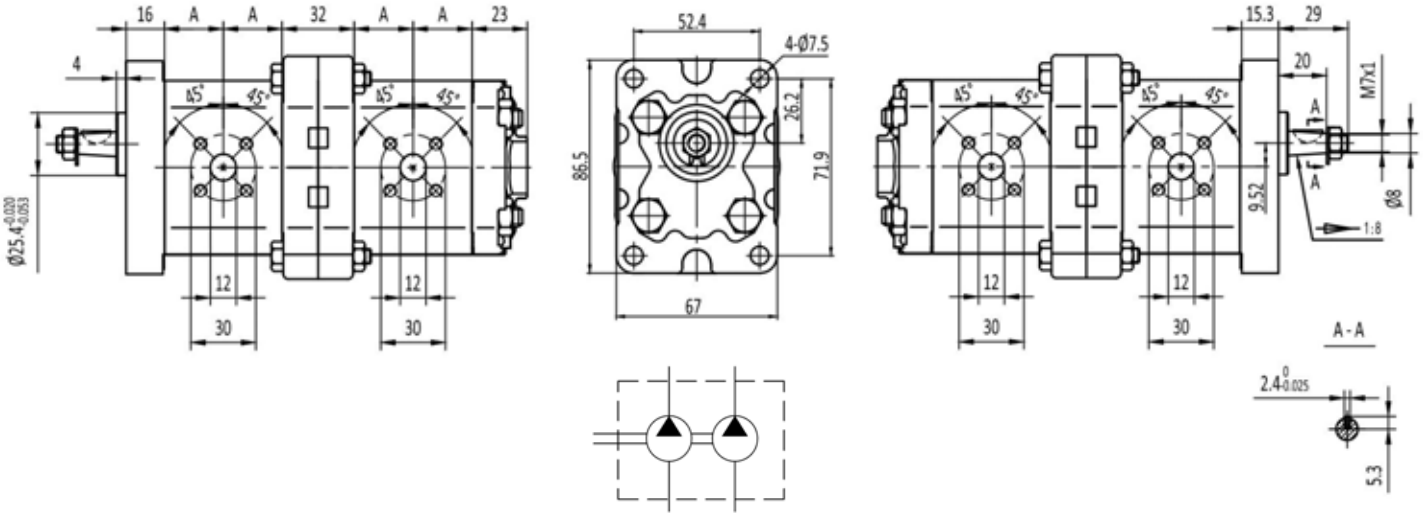


| Type | Displacement | Max. pressure | | | Max. speed | Min. speed | Dimensions |
|---|---|---|---|---|---|---|---|
| | | P1 | P2 | P3 | | | A |
| | ($cm^3$/rev) | bar | bar | bar | (r/min) | (r/min) | mm |
| KAP1/1E0-D-**/**-Fa | 0.8 | 200 | 225 | 250 | 3000 | 1000 | 17.8 |
| | 1.1 | 200 | 225 | 250 | 3000 | 1000 | 18 |
| | 1.3 | 200 | 225 | 250 | 3000 | 1000 | 18.5 |
| | 1.6 | 200 | 225 | 250 | 3000 | 1000 | 19 |
| | 1.8 | 200 | 225 | 250 | 3000 | 1000 | 19.5 |
| | 2.1 | 200 | 225 | 250 | 3000 | 1000 | 20 |
| | 2.7 | 200 | 225 | 250 | 3000 | 800 | 21 |
| | 3.2 | 200 | 225 | 250 | 3000 | 800 | 22 |
| | 3.7 | 200 | 225 | 250 | 3000 | 800 | 23 |
| | 4.2 | 200 | 225 | 250 | 3000 | 800 | 24 |
| | 4.8 | 190 | 210 | 230 | 3000 | 600 | 25 |
| | 5.8 | 190 | 210 | 230 | 3000 | 600 | 27 |
| | 7.0 | 160 | 180 | 200 | 2500 | 600 | 29 |
| | 8.0 | 160 | 180 | 200 | 2100 | 600 | 31 |

# KAP1/1E0-Fb

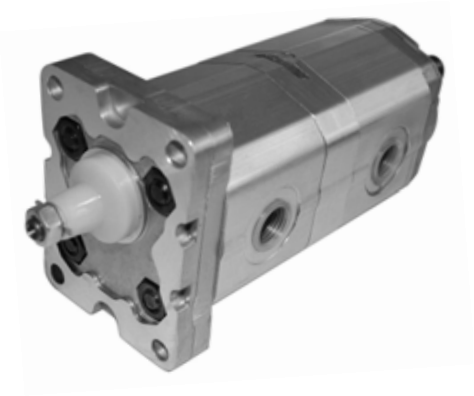

★ Use axial gap automatic compensation mechanism.

★ High sustained working pressure and long service life .

★ Anti fouling ability is strong and suitable for power units,machines and other kinds Of hydraulic systems .

**OUTLET** **INLET**

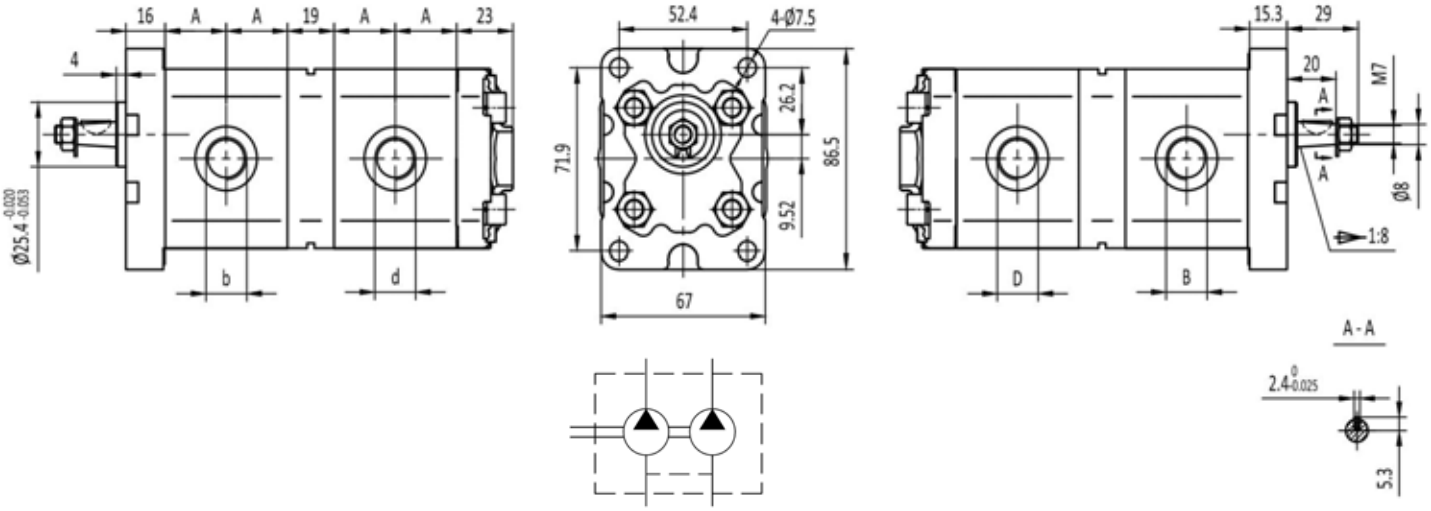


| Type | Displacement | Max. pressure | | | Max. | Min. | Dimensions | | | | |
|---|---|---|---|---|---|---|---|---|---|---|---|
| | | P1 | P2 | P3 | speed | speed | A | B | D | b | d |
| | ($cm^3$/rev) | bar | bar | bar | (r/min) | (r/min) | mm | | | | |
| KAP1/1E0-D-**/**-Fb | 0.8 | 200 | 225 | 250 | 3000 | 1000 | 17.8 | G3/8 | G3/8 | G3/8 | G3/8 |
| | 1.1 | 200 | 225 | 250 | 3000 | 1000 | 18 | G3/8 | G3/8 | G3/8 | G3/8 |
| | 1.3 | 200 | 225 | 250 | 3000 | 1000 | 18.5 | G3/8 | G3/8 | G3/8 | G3/8 |
| | 1.6 | 200 | 225 | 250 | 3000 | 1000 | 19 | G3/8 | G3/8 | G3/8 | G3/8 |
| | 1.8 | 200 | 225 | 250 | 3000 | 1000 | 19.5 | G3/8 | G3/8 | G3/8 | G3/8 |
| | 2.1 | 200 | 225 | 250 | 3000 | 1000 | 20 | G3/8 | G3/8 | G3/8 | G3/8 |
| | 2.7 | 200 | 225 | 250 | 3000 | 800 | 21 | G3/8 | G3/8 | G3/8 | G3/8 |
| | 3.2 | 200 | 225 | 250 | 3000 | 800 | 22 | G3/8 | G3/8 | G3/8 | G3/8 |
| | 3.7 | 200 | 225 | 250 | 3000 | 800 | 23 | G3/8 | G3/8 | G3/8 | G3/8 |
| | 4.2 | 200 | 225 | 250 | 3000 | 800 | 24 | G3/8 | G3/8 | G3/8 | G3/8 |
| | 4.8 | 190 | 210 | 230 | 3000 | 600 | 25 | G3/8 | G3/8 | G3/8 | G3/8 |
| | 5.8 | 190 | 210 | 230 | 3000 | 600 | 27 | G3/8 | G3/8 | G3/8 | G3/8 |
| | 7.0 | 160 | 180 | 200 | 2500 | 600 | 29 | G3/8 | G3/8 | G3/8 | G3/8 |
| | 8.0 | 160 | 180 | 200 | 2100 | 600 | 31 | G3/8 | G3/8 | G3/8 | G3/8 |

# HLP1/1E0-FdX3T0

★ Use axial gap automatic compensation mechanism.

★ High sustained working pressure and long service life .

★ Anti fouling ability is strong and suitable for trash compactors , log splitters , crimping Machines and metal forming machines etc .

**OUTLET** **INLET**

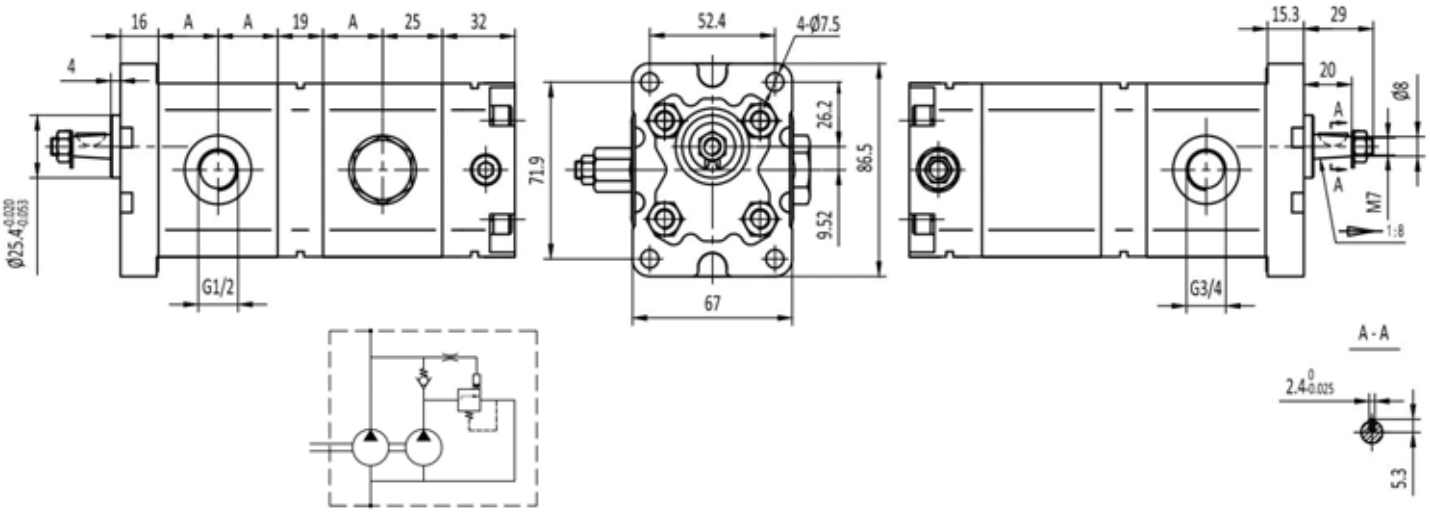


| Type | Displacement | Front pump Max. pressure | | | Rear pump Max. pressure | Max. speed | Min. speed | Dimensions |
|---|---|---|---|---|---|---|---|---|
| | | P1 | P2 | P3 | P1 | | | A |
| | ($cm^3$/rev) | bar | bar | bar | bar | (r/min) | (r/min) | mm |
| HLP1/1E0-D-**/**-FdX3T0 | 0.8 | 200 | 225 | 250 | According the setting pressure (standard setting 30 bar) | 3000 | 1000 | 17.8 |
| | 1.1 | 200 | 225 | 250 | | 3000 | 1000 | 18 |
| | 1.3 | 200 | 225 | 250 | | 3000 | 1000 | 18.5 |
| | 1.6 | 200 | 225 | 250 | | 3000 | 1000 | 19 |
| | 1.8 | 200 | 225 | 250 | | 3000 | 1000 | 19.5 |
| | 2.1 | 200 | 225 | 250 | | 3000 | 800 | 20 |
| | 2.7 | 200 | 225 | 250 | | 3000 | 800 | 21 |
| | 3.2 | 200 | 225 | 250 | | 3000 | 800 | 22 |
| | 3.7 | 200 | 225 | 250 | | 3000 | 800 | 23 |
| | 4.2 | 200 | 225 | 250 | | 3000 | 600 | 24 |
| | 4.8 | 190 | 210 | 230 | | 3000 | 600 | 25 |
| | 5.8 | 190 | 210 | 230 | | 3000 | 600 | 27 |
| | 7.0 | 160 | 180 | 200 | | 2100 | 600 | 29 |
| | 8.0 | 160 | 180 | 200 | | 2000 | 600 | 31 |

# KAP1/1[HLP1/1]

PORTS VERSION

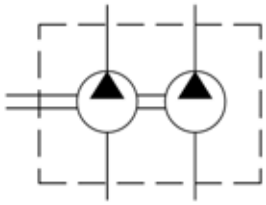

Fa

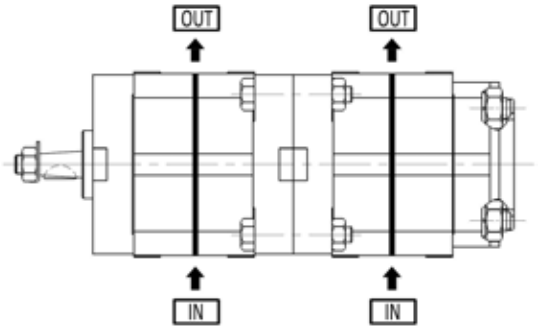


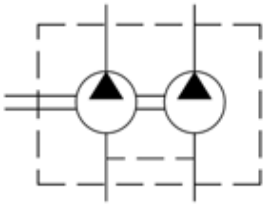

Fb

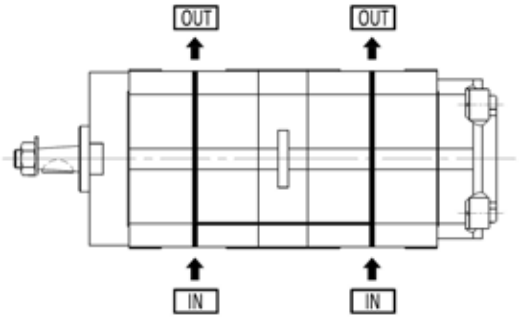


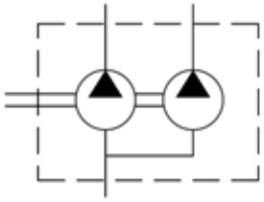

Fc

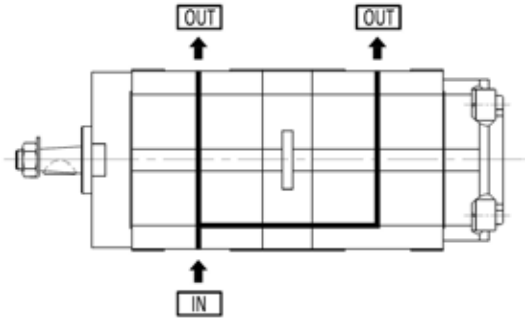


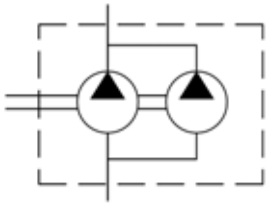

Fd

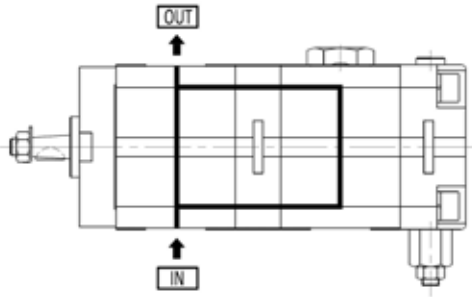

# KAP1/1[HLP1/1]

## OPTIONS

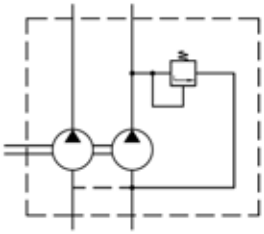

X0

| DISCRIPTION |
| --- |
| Pressure relief valve with internal drain ; setting pressure between 5 and 230 bar . |

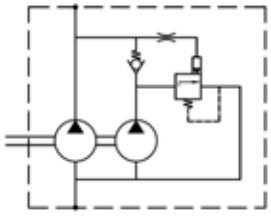

X3

| DISCRIPTION |
| --- |
| Special integrated valves for high-low gear pumps ; and standard setting pressure is 30 bar . |

# KGP2/2[HLP2/2]

## HOW TO ORDER

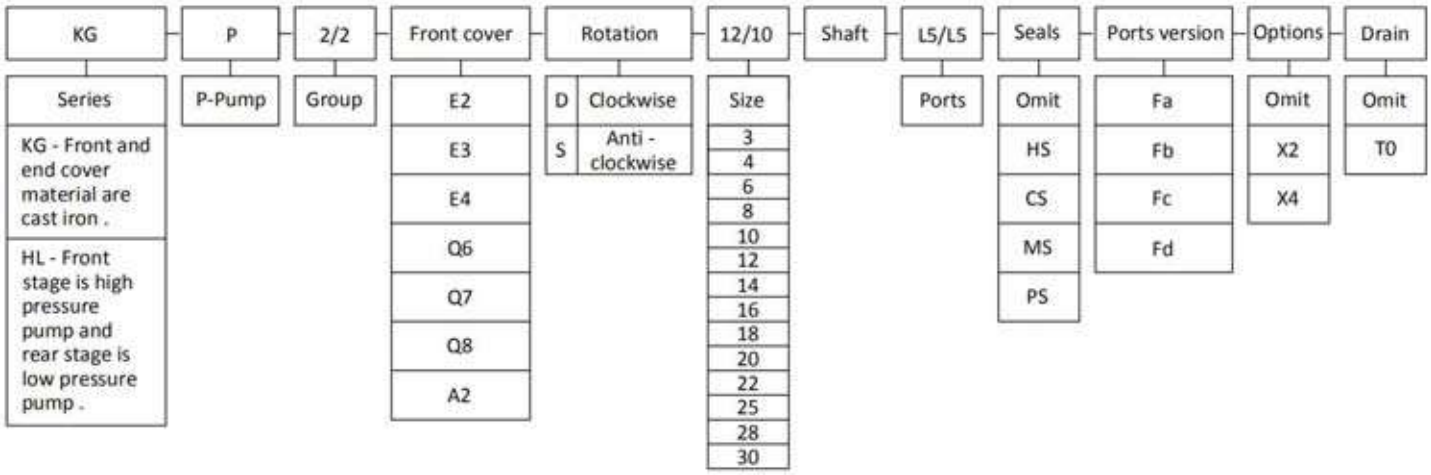


**Remark** : choose the shaft and ports can accord the types of " KGP2[KAP2] " series ; and if you have other types , please contact us .

### Seals

Omit - Range between -10℃and +80℃， inlet pressure up to max. 3 bar absolute ( standard seal ) .

HS - Version suitable for fluid at hi-temperatures , range between -10℃and +120℃ .

CS - Version suitable for fluid at low-temperatures , range between -40℃and +80℃ .

MS - Version suitable for inlet pressure up to max. 3 and 6 bar absolute .

PS - Version suitable for inlet pressure up to max. 3 and 10 bar absolute .

### Ports version

Fa - two inlet and two outlet ( separated type ) .

Fb - two inlet and two outlet ( common type ) .

Fc - one inlet and two outlet ( inlet on the front pump ) .

Fd - one inlet and one outlet ( only for " HL " series ) .

### Options

Omit - Have no valve .

X2 - pressure valve .

X4 - special integrated valve .

### Drain

Omit - Have no drain .

T0 - Internal drain .

## Examples

KGP2/2E2-D-12/10Z5L5/L5-Fa = KG series , 2/2 group tandem pump , E2 front cover , Clockwise , 12 and 10 cc/rev , Z5 shaft , L5 and L5 ports , standard seal , two inlet and two outlet ( separated type ) .

# KGP2/2E2-Fa

★ Use axial gap automatic compensation mechanism.

★ High sustained working pressure and long service life .

★ Anti fouling ability is strong and suitable for power units , tractors ,machines and other kinds 0f hydraulic systems .

**OUTLET** **INLET**

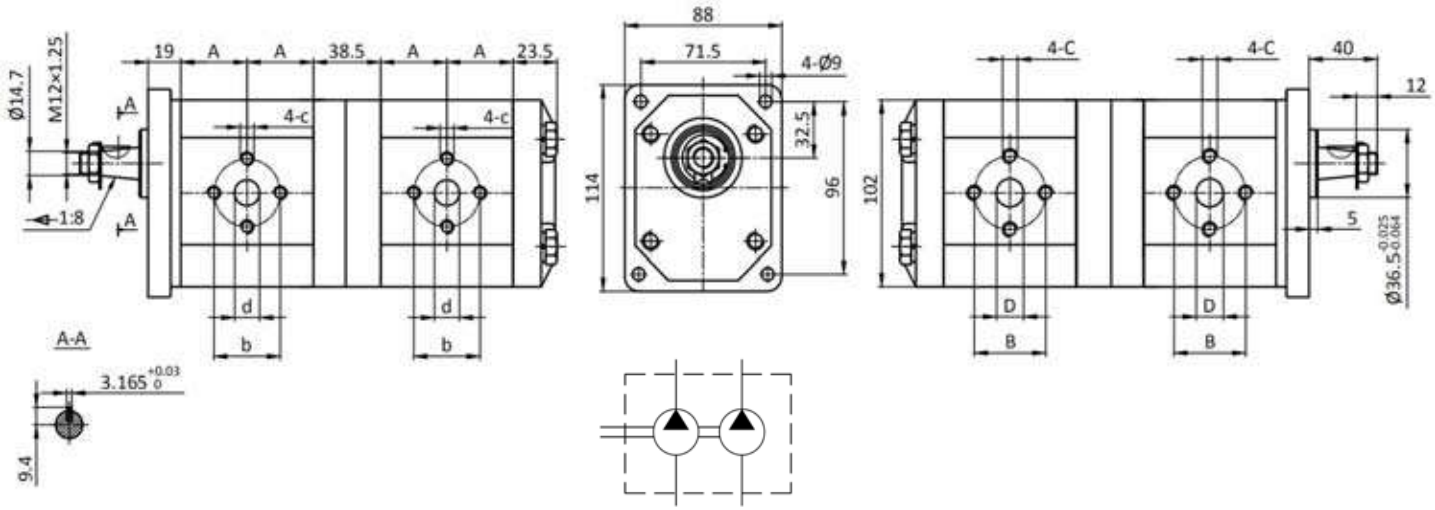


| Type | Displacement | Max. pressure | | | Max. speed | Min. speed | Dimensions | | | | | | |
|---|---|---|---|---|---|---|---|---|---|---|---|---|---|
| | | P1 | P2 | P3 | | | A | B | D | C | b | d | c |
| | ($cm^3$/rev) | bar | bar | bar | (r/min) | (r/min) | mm | mm | mm | | mm | mm | |
| KGP2/2E2-D-**/**-Fa | 3 | 200 | 225 | 250 | 3000 | 800 | 24.5 | 30 | 13 | M6 | 30 | 13 | M6 |
| | 4 | 200 | 225 | 250 | 3000 | 600 | 25.3 | 30 | 13 | M6 | 30 | 13 | M6 |
| | 6 | 200 | 225 | 250 | 3000 | 600 | 27 | 30 | 13 | M6 | 30 | 13 | M6 |
| | 8 | 200 | 225 | 250 | 3000 | 500 | 28.6 | 30 | 13 | M6 | 30 | 13 | M6 |
| | 10 | 200 | 225 | 250 | 3000 | 500 | 30.3 | 40 | 20 | M8 | 30 | 13 | M6 |
| | 12 | 200 | 225 | 250 | 3000 | 500 | 32 | 40 | 20 | M8 | 30 | 13 | M6 |
| | 14 | 200 | 225 | 250 | 3000 | 500 | 33.6 | 40 | 20 | M8 | 30 | 13 | M6 |
| | 16 | 200 | 225 | 250 | 3000 | 500 | 35.3 | 40 | 20 | M8 | 30 | 13 | M6 |
| | 18 | 200 | 225 | 250 | 3000 | 500 | 37 | 40 | 20 | M8 | 30 | 13 | M6 |
| | 20 | 200 | 225 | 250 | 3000 | 400 | 38.6 | 40 | 20 | M8 | 30 | 13 | M6 |
| | 22 | 200 | 225 | 250 | 3000 | 400 | 40.3 | 40 | 20 | M8 | 30 | 13 | M6 |
| | 25 | 200 | 215 | 230 | 3000 | 400 | 42.8 | 40 | 22 | M8 | 30 | 13 | M6 |
| | 28 | 180 | 190 | 200 | 2500 | 400 | 45.3 | 40 | 22 | M8 | 30 | 13 | M6 |
| | 30 | 160 | 170 | 180 | 2500 | 400 | 47 | 40 | 22 | M8 | 30 | 13 | M6 |

# KGP2/2E2-Fb

★ Use axial gap automatic compensation mechanism.

★ High sustained working pressure and long service life .

★ Anti fouling ability is strong and suitable for power units , tractors ,machines and other kinds 0f hydraulic systems .

**OUTLET** **INLET**

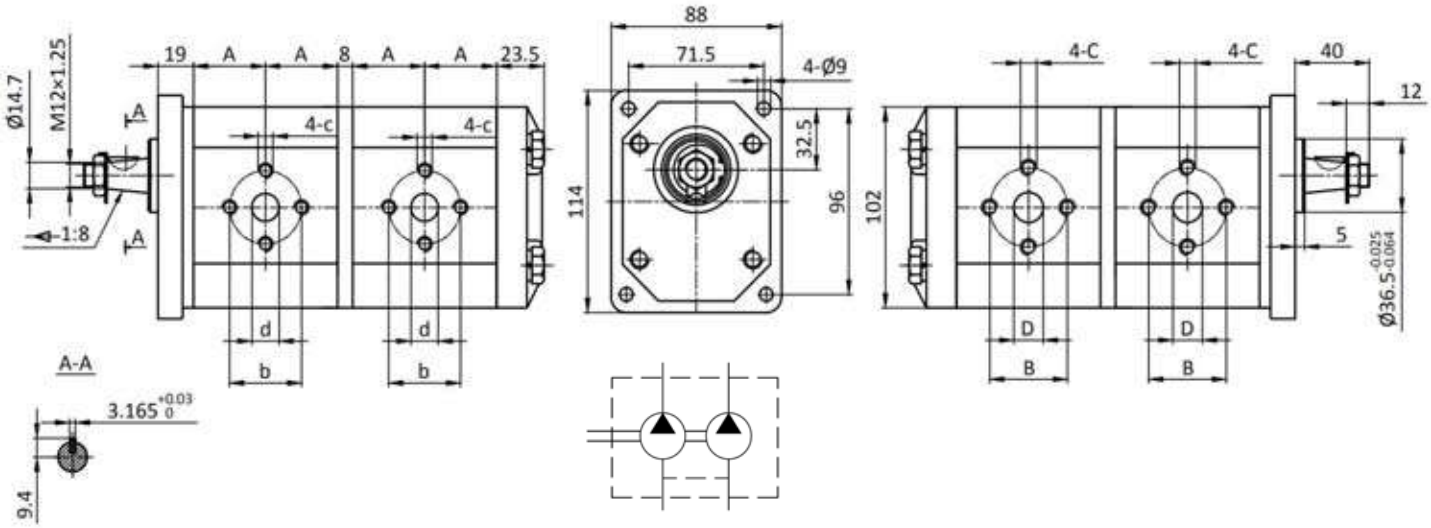


| Type | Displacement | Max. pressure | | | Max. | Min. | Dimensions | | | | | | |
|---|---|---|---|---|---|---|---|---|---|---|---|---|---|
| | | P1 | P2 | P3 | speed | speed | A | B | D | C | b | d | c |
| | ($cm^3$/rev) | bar | bar | bar | (r/min) | (r/min) | mm | mm | mm | | mm | mm | |
| KGP2/2E2-D-**/**-Fb | 3 | 200 | 225 | 250 | 3000 | 800 | 24.5 | 30 | 13 | M6 | 30 | 13 | M6 |
| | 4 | 200 | 225 | 250 | 3000 | 600 | 25.3 | 30 | 13 | M6 | 30 | 13 | M6 |
| | 6 | 200 | 225 | 250 | 3000 | 600 | 27 | 30 | 13 | M6 | 30 | 13 | M6 |
| | 8 | 200 | 225 | 250 | 3000 | 500 | 28.6 | 30 | 13 | M6 | 30 | 13 | M6 |
| | 10 | 200 | 225 | 250 | 3000 | 500 | 30.3 | 40 | 20 | M8 | 30 | 13 | M6 |
| | 12 | 200 | 225 | 250 | 3000 | 500 | 32 | 40 | 20 | M8 | 30 | 13 | M6 |
| | 14 | 200 | 225 | 250 | 3000 | 500 | 33.6 | 40 | 20 | M8 | 30 | 13 | M6 |
| | 16 | 200 | 225 | 250 | 3000 | 500 | 35.3 | 40 | 20 | M8 | 30 | 13 | M6 |
| | 18 | 200 | 225 | 250 | 3000 | 500 | 37 | 40 | 20 | M8 | 30 | 13 | M6 |
| | 20 | 200 | 225 | 250 | 3000 | 400 | 38.6 | 40 | 20 | M8 | 30 | 13 | M6 |
| | 22 | 200 | 225 | 250 | 3000 | 400 | 40.3 | 40 | 20 | M8 | 30 | 13 | M6 |
| | 25 | 200 | 215 | 230 | 3000 | 400 | 42.8 | 40 | 22 | M8 | 30 | 13 | M6 |
| | 28 | 180 | 190 | 200 | 2500 | 400 | 45.3 | 40 | 22 | M8 | 30 | 13 | M6 |
| | 30 | 160 | 170 | 180 | 2500 | 400 | 47 | 40 | 22 | M8 | 30 | 13 | M6 |

# KGP2/2E2-FcX2T0

★ Use axial gap automatic compensation mechanism.

★ High sustained working pressure and long service life .

★ Anti fouling ability is strong and suitable for power units , tractors ,machines and other kinds 0f hydraulic systems .

**OUTLET** **INLET**

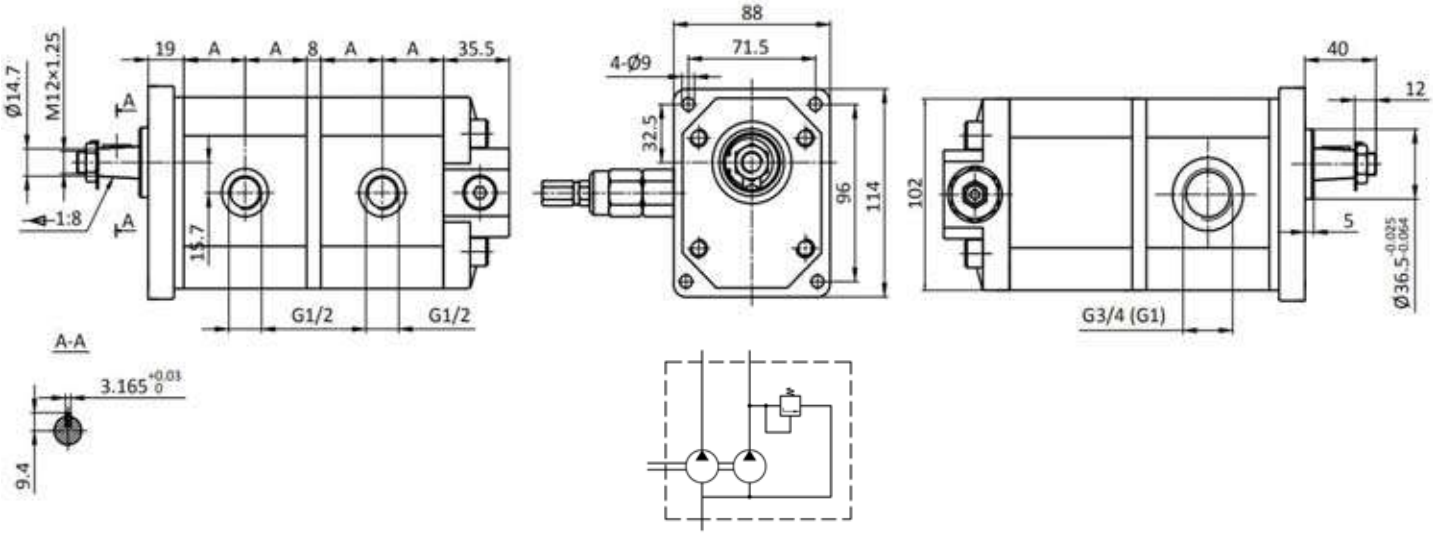


| Type | Displacement | Front pump Max. pressure | | | Rear pump Max. pressure | Max. speed | Min. speed | Dimensions |
|---|---|---|---|---|---|---|---|---|
| | | P1 | P2 | P3 | P1 | | | A |
| | ($cm^3$/rev) | bar | bar | bar | bar | (r/min) | (r/min) | mm |
| KGP2/2E2-D-**/**-FcX2T0 | 3 | 200 | 225 | 250 | According the setting pressure ( setting pressure between 5 and 250 bar ) | 3000 | 800 | 24.5 |
| | 4 | 200 | 225 | 250 | | 3000 | 600 | 25.3 |
| | 6 | 200 | 225 | 250 | | 3000 | 600 | 27 |
| | 8 | 200 | 225 | 250 | | 3000 | 500 | 28.6 |
| | 10 | 200 | 225 | 250 | | 3000 | 500 | 30.3 |
| | 12 | 200 | 225 | 250 | | 3000 | 500 | 32 |
| | 14 | 200 | 225 | 250 | | 3000 | 500 | 33.6 |
| | 16 | 200 | 225 | 250 | | 3000 | 500 | 35.3 |
| | 18 | 200 | 225 | 250 | | 3000 | 500 | 37 |
| | 20 | 200 | 225 | 250 | | 3000 | 400 | 38.6 |
| | 22 | 200 | 225 | 250 | | 3000 | 400 | 40.3 |
| | 25 | 200 | 215 | 230 | | 3000 | 400 | 42.8 |
| | 28 | 180 | 190 | 200 | | 2500 | 400 | 45.3 |
| | 30 | 160 | 170 | 180 | | 2500 | 400 | 47 |

# HLP2/2E2-FdX4

★ Use axial gap automatic compensation mechanism.

★ High sustained working pressure and long service life .

★ Anti fouling ability is strong and suitable for power units , tractors ,machines and other kinds 0f hydraulic systems .

**OUTLET** **INLET**

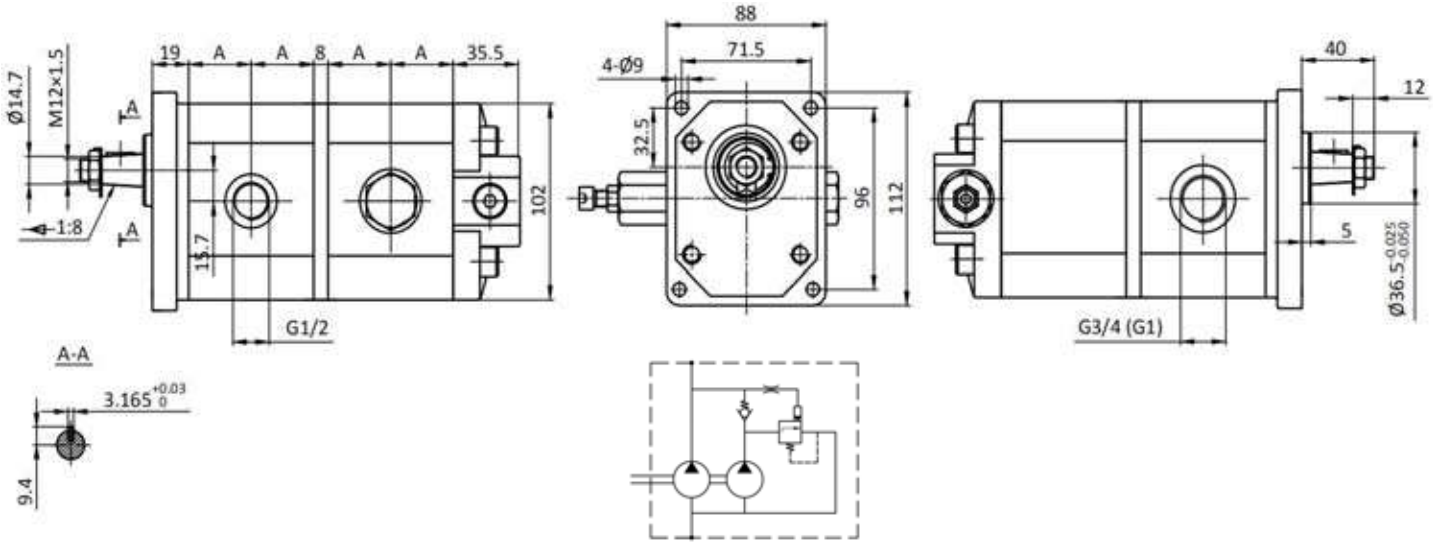


| Type | Displacement | Front pump Max. pressure | | | Rear pump Max. pressure | Max. speed | Min. speed | Dimensions |
|---|---|---|---|---|---|---|---|---|
| | | P1 | P2 | P3 | P1 | | | A |
| | ($cm^3$/rev) | bar | bar | bar | bar | (r/min) | (r/min) | mm |
| HLP2/2E2-D-**/**-FdX4T0 | 3 | 200 | 225 | 250 | According the setting pressure ( standard setting 50 bar ) | 3000 | 800 | 24.5 |
| | 4 | 200 | 225 | 250 | | 3000 | 600 | 25.3 |
| | 6 | 200 | 225 | 250 | | 3000 | 600 | 27 |
| | 8 | 200 | 225 | 250 | | 3000 | 500 | 28.6 |
| | 10 | 200 | 225 | 250 | | 3000 | 500 | 30.3 |
| | 12 | 200 | 225 | 250 | | 3000 | 500 | 32 |
| | 14 | 200 | 225 | 250 | | 3000 | 500 | 33.6 |
| | 16 | 200 | 225 | 250 | | 3000 | 500 | 35.3 |
| | 18 | 200 | 225 | 250 | | 3000 | 500 | 37 |
| | 20 | 200 | 225 | 250 | | 3000 | 400 | 38.6 |
| | 22 | 200 | 225 | 250 | | 3000 | 400 | 40.3 |
| | 25 | 200 | 215 | 230 | | 3000 | 400 | 42.8 |
| | 28 | 180 | 190 | 200 | | 2500 | 400 | 45.3 |
| | 30 | 160 | 170 | 180 | | 2500 | 400 | 47 |

# KGP2/2[HLP2/2]

PORTS VERSION

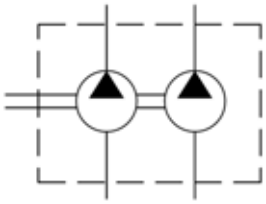

Fa

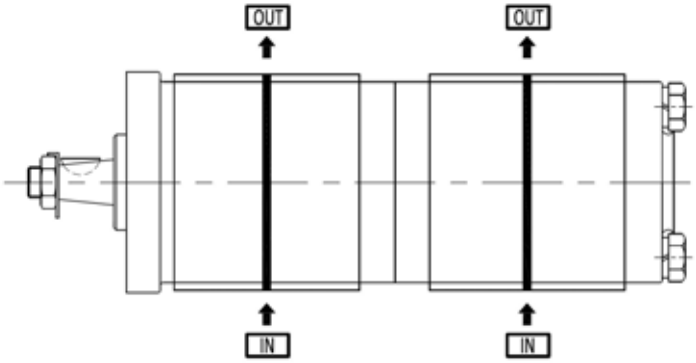


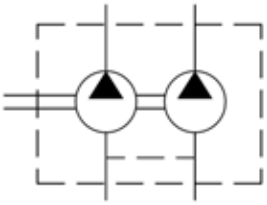

Fb

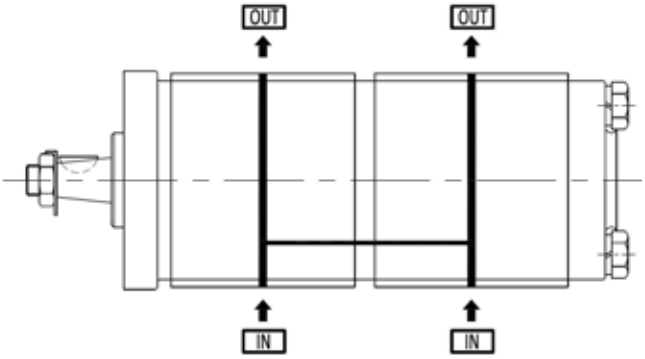


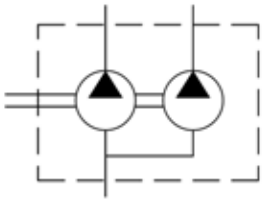

Fc

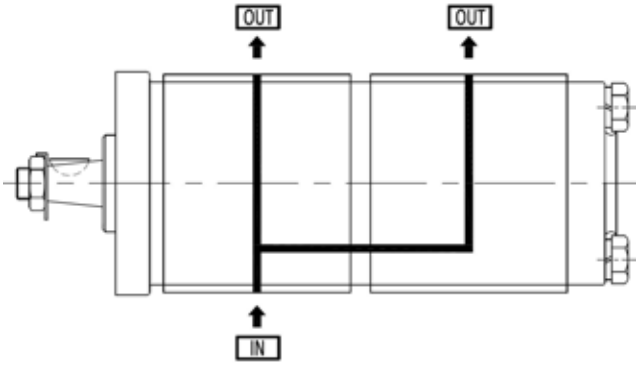


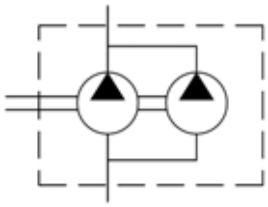

Fd

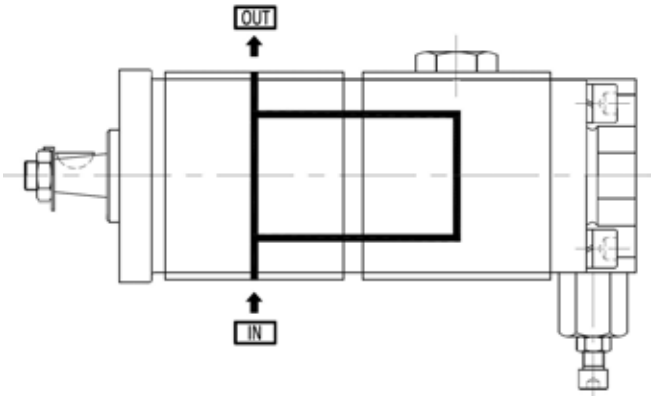

# KGP2/2[HLP2/2]

## OPTIONS

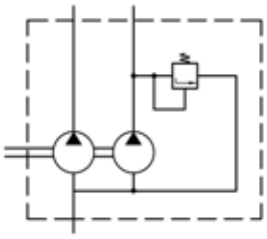

X2

| DISCRIPTION |
| --- |
| Pressure relief valve with internal drain ; setting pressure between 5 and 230 bar . |

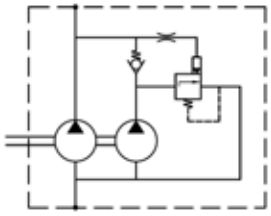

X4

| DISCRIPTION |
| --- |
| Special integrated valves for high-low gear pumps ; and standard setting pressure is 50 bar . |

# KGP3/2

## HOW TO ORDER

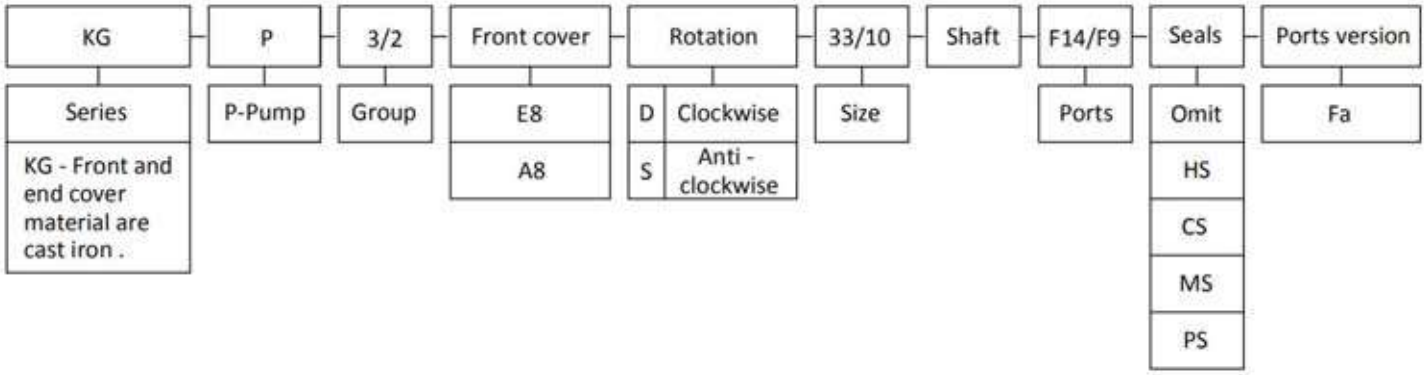


**Remark** : Choose the shaft , sizes and ports of the front pump can accord the types of " KGP3 " series ; and choose the sizes and ports of the rear pump can accord the types of " KGP2[KAP2] " series , and if you have other types , please contact us .

### Seals

Omit - Range between -10℃and +80℃， inlet pressure up to max. 3 bar absolute ( standard seal ) .

HS - Version suitable for fluid at hi-temperatures , range between -10℃and +120℃ .

CS - Version suitable for fluid at low-temperatures , range between -40℃and +80℃ .

MS - Version suitable for inlet pressure up to max. 3 and 6 bar absolute .

PS - Version suitable for inlet pressure up to max. 3 and 10 bar absolute .

### Ports version

Fa - two inlet and two outlet ( separated type ) .

## Examples

KGP3/2E8-D-33/10Z9F14/F9-Fa = KG series , 3/2 group tandem pump , E8 front cover , Clockwise , 33 and 10 cc/rev , Z9 shaft , F14 and F9 ports , standard seal , two inlet and two outlet ( separated type ) .

# KGP3/2E8-Fa

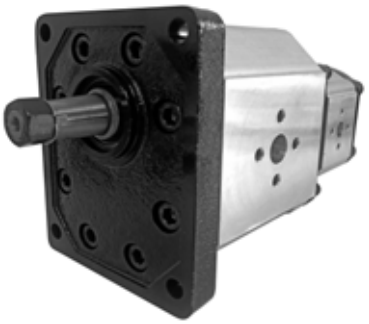

★ Use axial gap automatic compensation mechanism.

★ High sustained working pressure and long service life .

★ Anti fouling ability is strong and suitable for power units , tractors ,machines and other kinds 0f hydraulic systems .

**OUTLET** **INLET**

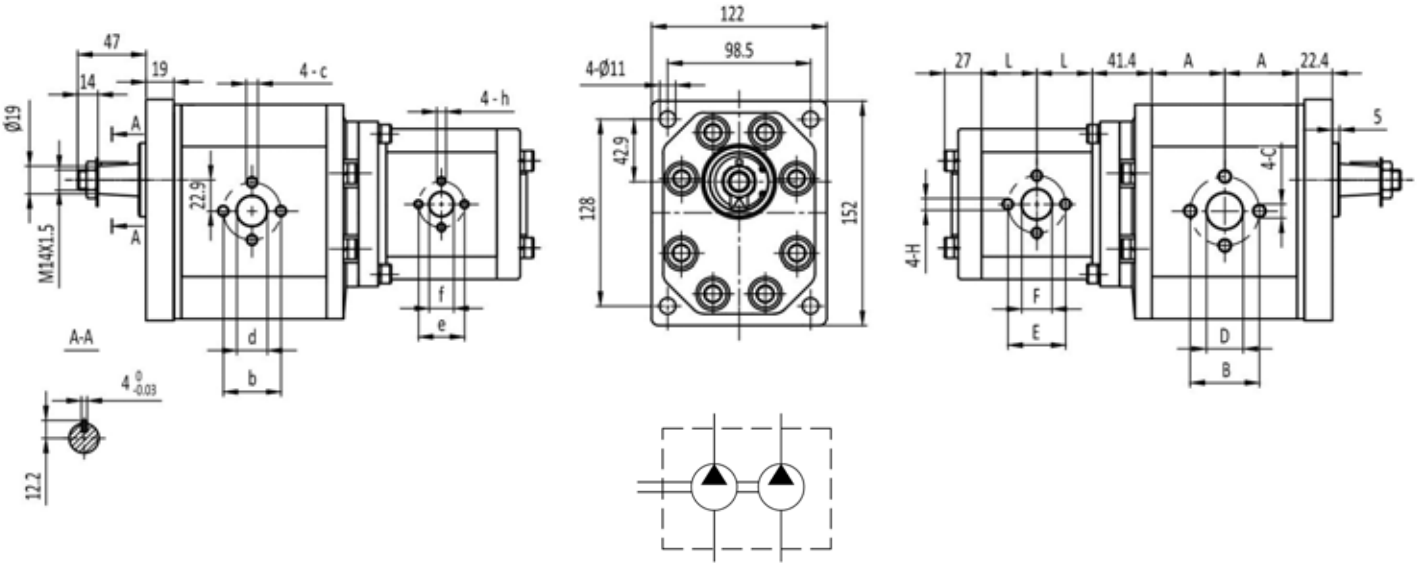


| Technical parameter table of front pump | | | | | | | | | | | | | |
|---|---|---|---|---|---|---|---|---|---|---|---|---|---|
| Type | Displacement | Max. pressure | | | Max. | Min. | Dimensions | | | | | | |
| | | P1 | P2 | P3 | speed | speed | A | B | D | C | b | d | c |
| | ($cm^3$/rev) | bar | bar | bar | (r/min) | (r/min) | mm | mm | mm | | mm | mm | |
| KGP3/2E8-D-20/**-Fa | 20 | 200 | 225 | 250 | 3000 | 600 | 40.6 | 40 | 19 | M8 | 40 | 19 | M8 |
| KGP3/2E8-D-22/**-Fa | 22 | 200 | 225 | 250 | 3000 | 600 | 41.6 | 40 | 19 | M8 | 40 | 19 | M8 |
| KGP3/2E8-D-26/**-Fa | 26 | 200 | 225 | 250 | 3000 | 600 | 43.1 | 40 | 19 | M8 | 40 | 19 | M8 |
| KGP3/2E8-D-33/**-Fa | 33 | 200 | 225 | 250 | 3000 | 500 | 46.1 | 51 | 27 | M10 | 40 | 19 | M8 |
| KGP3/2E8-D-39/**-Fa | 39 | 200 | 225 | 250 | 3000 | 500 | 49.6 | 51 | 27 | M10 | 40 | 19 | M8 |
| KGP3/2E8-D-46/**-Fa | 46 | 200 | 225 | 250 | 3000 | 500 | 52.6 | 51 | 27 | M10 | 40 | 19 | M8 |
| KGP3/2E8-D-50/**-Fa | 50 | 200 | 225 | 250 | 3000 | 500 | 54.6 | 51 | 27 | M10 | 40 | 19 | M8 |
| KGP3/2E8-D-52/**-Fa | 52 | 200 | 225 | 250 | 3000 | 500 | 55.6 | 51 | 27 | M10 | 40 | 19 | M8 |
| KGP3/2E8-D-55/**-Fa | 55 | 200 | 230 | 250 | 2800 | 400 | 56.6 | 51 | 27 | M10 | 40 | 19 | M8 |
| KGP3/2E8-D-63/**-Fa | 63 | 200 | 230 | 250 | 2800 | 400 | 60.6 | 62 | 33 | M10 | 51 | 27 | M10 |
| KGP3/2E8-D-71/**-Fa | 71 | 180 | 200 | 220 | 2500 | 400 | 64.1 | 62 | 33 | M10 | 51 | 27 | M10 |

# KGP3/2E8-Fa

| Technical parameter table of rear pump | | | | | | | | | | | | | |
|---|---|---|---|---|---|---|---|---|---|---|---|---|---|
| Type | Displacement | Max. pressure | | | Max. | Min. | Dimensions | | | | | | |
| | | P1 | P2 | P3 | speed | speed | L | E | F | H | e | f | h |
| | ($cm^3$/rev) | bar | bar | bar | (r/min) | (r/min) | mm | mm | mm | | mm | mm | |
| KGP3/2E8-D-**/3-Fa | 3 | 200 | 225 | 250 | 3000 | 800 | 24.8 | 30 | 13 | M6 | 30 | 13 | M6 |
| KGP3/2E8-D-**/4-Fa | 4 | 200 | 225 | 250 | 3000 | 600 | 25.5 | 30 | 13 | M6 | 30 | 13 | M6 |
| KGP3/2E8-D-**/6-Fa | 6 | 200 | 225 | 250 | 3000 | 600 | 27.1 | 30 | 13 | M6 | 30 | 13 | M6 |
| KGP3/2E8-D-**/8-Fa | 8 | 200 | 225 | 250 | 3000 | 500 | 28.7 | 30 | 13 | M6 | 30 | 13 | M6 |
| KGP3/2E8-D-**/10-Fa | 10 | 200 | 225 | 250 | 3000 | 500 | 30.3 | 40 | 20 | M8 | 30 | 13 | M6 |
| KGP3/2E8-D-**/12-Fa | 12 | 200 | 225 | 250 | 3000 | 500 | 32 | 40 | 20 | M8 | 30 | 13 | M6 |
| KGP3/2E8-D-**/14-Fa | 14 | 200 | 225 | 250 | 3000 | 500 | 33.6 | 40 | 20 | M8 | 30 | 13 | M6 |
| KGP3/2E8-D-**/16-Fa | 16 | 200 | 225 | 250 | 3000 | 500 | 35.3 | 40 | 20 | M8 | 30 | 13 | M6 |
| KGP3/2E8-D-**/18Fa | 18 | 200 | 225 | 250 | 3000 | 500 | 36.9 | 40 | 20 | M8 | 30 | 13 | M6 |
| KGP3/2E8-D-**/20-Fa | 20 | 200 | 225 | 250 | 3000 | 400 | 38.5 | 40 | 20 | M8 | 30 | 13 | M6 |
| KGP3/2E8-D-**/22-Fa | 22 | 200 | 225 | 250 | 3000 | 400 | 40.2 | 40 | 20 | M8 | 30 | 13 | M6 |
| KGP3/2E8-D-**/25-Fa | 25 | 200 | 215 | 230 | 3000 | 400 | 42.6 | 40 | 22 | M8 | 30 | 13 | M6 |
| KGP3/2E8-D-**/28-Fa | 28 | 180 | 190 | 200 | 2500 | 400 | 45.1 | 40 | 22 | M8 | 30 | 13 | M6 |
| KGP3/2E8-D-**/30-Fa | 30 | 160 | 170 | 180 | 2500 | 400 | 46.8 | 40 | 22 | M8 | 30 | 13 | M6 |

# KGP3/2A8-Fa

★ Use axial gap automatic compensation mechanism.

★ High sustained working pressure and long service life .

★ Anti fouling ability is strong and suitable for power units , tractors ,machines and other kinds 0f hydraulic systems .

**OUTLET** **INLET**

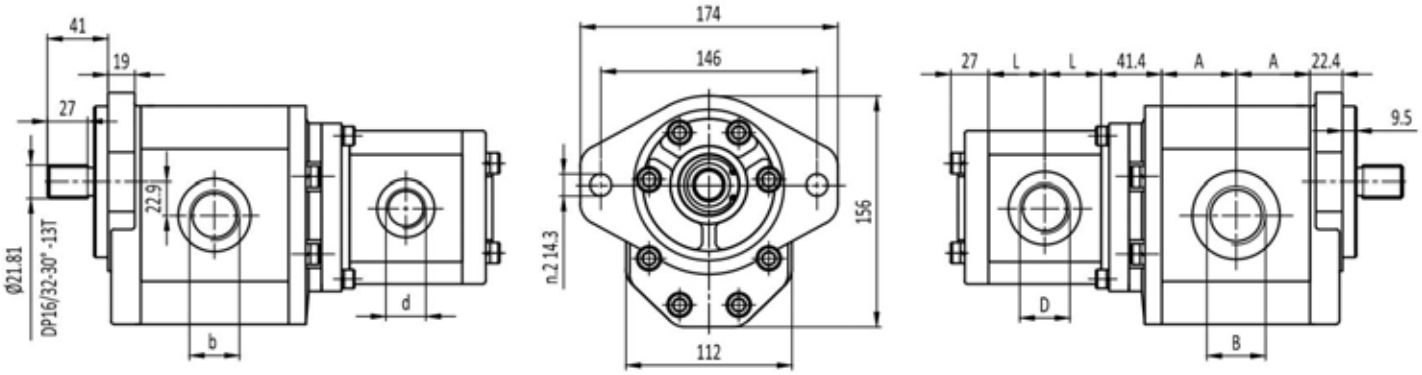


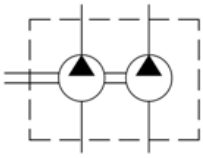

| Technical parameter table of front pump | | | | | | | | | |
|---|---|---|---|---|---|---|---|---|---|
| Type | Displacement | Max. pressure | | | Max. | Min. | Dimensions | | |
| | | P1 | P2 | P3 | speed | speed | A | B | b |
| | ($cm^3$/rev) | bar | bar | bar | (r/min) | (r/min) | mm | | |
| KGP3/2A8-D-20/**-Fa | 20 | 200 | 225 | 250 | 3000 | 600 | 40.6 | G3/4 | G3/4 |
| KGP3/2A8-D-22/**-Fa | 22 | 200 | 225 | 250 | 3000 | 600 | 41.6 | G3/4 | G3/4 |
| KGP3/2A8-D-26/**-Fa | 26 | 200 | 225 | 250 | 3000 | 600 | 43.1 | G1 | G3/4 |
| KGP3/2A8-D-33/**-Fa | 33 | 200 | 225 | 250 | 3000 | 500 | 46.1 | G1 | G3/4 |
| KGP3/2A8-D-39/**-Fa | 39 | 200 | 225 | 250 | 3000 | 500 | 49.6 | G1 | G3/4 |
| KGP3/2A8-D-46/**-Fa | 46 | 200 | 225 | 250 | 3000 | 500 | 52.6 | G1 1/4 | G1 |
| KGP3/2A8-D-50/**-Fa | 50 | 200 | 225 | 250 | 3000 | 500 | 54.6 | G1 1/4 | G1 |
| KGP3/2A8-D-52/**-Fa | 52 | 200 | 225 | 250 | 3000 | 500 | 55.6 | G1 1/4 | G1 |
| KGP3/2A8-D-55/**-Fa | 55 | 200 | 230 | 250 | 2800 | 400 | 56.6 | G1 1/4 | G1 |
| KGP3/2A8-D-63/**-Fa | 63 | 200 | 230 | 250 | 2800 | 400 | 60.6 | G1 1/4 | G1 |
| KGP3/2A8-D-71/**-Fa | 71 | 180 | 200 | 220 | 2500 | 400 | 64.1 | G1 1/2 | G1 1/4 |

# KGP3/2A8-Fa

| Technical parameter table of rear pump | | | | | | | | | |
|---|---|---|---|---|---|---|---|---|---|
| Type | Displacement | Max. pressure | | | Max. speed | Min. speed | Dimensions | | |
| | | P1 | P2 | P3 | | | L | D | d |
| | ($cm^3$/rev) | bar | bar | bar | (r/min) | (r/min) | mm | | |
| KGP3/2A8-D-**/3-Fa | 3 | 200 | 225 | 250 | 3000 | 800 | 24.8 | G1/2 | G1/2 |
| KGP3/2A8-D-**/4-Fa | 4 | 200 | 225 | 250 | 3000 | 600 | 25.5 | G1/2 | G1/2 |
| KGP3/2A8-D-**/6-Fa | 6 | 200 | 225 | 250 | 3000 | 600 | 27.1 | G3/4 | G1/2 |
| KGP3/2A8-D-**/8-Fa | 8 | 200 | 225 | 250 | 3000 | 500 | 28.7 | G3/4 | G1/2 |
| KGP3/2A8-D-**/10-Fa | 10 | 200 | 225 | 250 | 3000 | 500 | 30.3 | G3/4 | G1/2 |
| KGP3/2A8-D-**/12-Fa | 12 | 200 | 225 | 250 | 3000 | 500 | 32 | G3/4 | G1/2 |
| KGP3/2A8-D-**/14-Fa | 14 | 200 | 215 | 230 | 3000 | 500 | 33.6 | G3/4 | G1/2 |
| KGP3/2A8-D-**/16-Fa | 16 | 200 | 210 | 220 | 3000 | 500 | 35.3 | G3/4 | G1/2 |
| KGP3/2A8-D-**/18-Fa | 18 | 180 | 190 | 200 | 3000 | 500 | 36.9 | G3/4 | G1/2 |
| KGP3/2A8-D-**/20-Fa | 20 | 160 | 270 | 180 | 3000 | 400 | 38.5 | G3/4 | G1/2 |
| KGP3/2A8-D-**/22-Fa | 22 | 140 | 150 | 160 | 3000 | 400 | 40.2 | G3/4 | G1/2 |
| KGP3/2A8-D-**/25-Fa | 25 | 120 | 130 | 140 | 3000 | 400 | 42.6 | G3/4 | G1/2 |
| KGP3/2A8-D-**/28-Fa | 28 | 110 | 120 | 130 | 2500 | 400 | 45.1 | G3/4 | G1/2 |
| KGP3/2A8-D-**/30-Fa | 30 | 100 | 110 | 120 | 2500 | 400 | 46.8 | G3/4 | G1/2 |

## PORTS VERSION

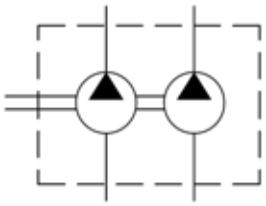

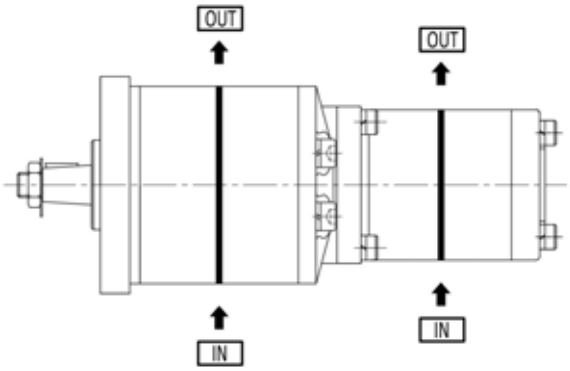


Fa

# KGP3/3

## HOW TO ORDER

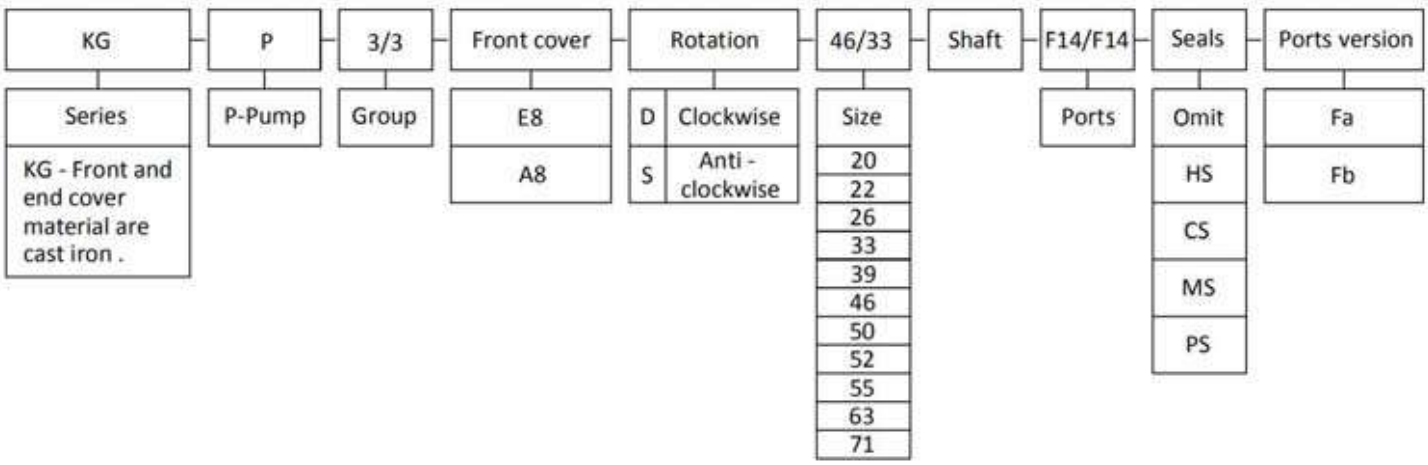


**Remark** : Choose the shaft and ports can accord the types of " KGP3 " series ; and if you have other types , please contact us .

### Seals

Omit - Range between -10℃and +80℃， inlet pressure up to max. 3 bar absolute ( standard seal ) .

HS - Version suitable for fluid at hi-temperatures , range between -10℃and +120℃ .

CS - Version suitable for fluid at low-temperatures , range between -40℃and +80℃ .

MS - Version suitable for inlet pressure up to max. 3 and 6 bar absolute .

PS - Version suitable for inlet pressure up to max. 3 and 10 bar absolute .

### Ports version

Fa - two inlet and two outlet ( separated type ) .

Fb - two inlet and two outlet ( common type ) .

## Examples

KGP3/3E8-D-46/33Z9F14/F14-Fa = KG series ,3/3 group tandem pump , E8 front cover , Clockwise , 46 and 33 cc/rev , Z9 shaft ,F14 and F14 ports , standard seal , two inlet and two outlet ( separated type ) .

# KGP3/3E8-Fa

★ Use axial gap automatic compensation mechanism.

★ High sustained working pressure and long service life .

★ Anti fouling ability is strong and suitable for power units , tractors ,machines and other kinds 0f hydraulic systems .

**OUTLET** **INLET**

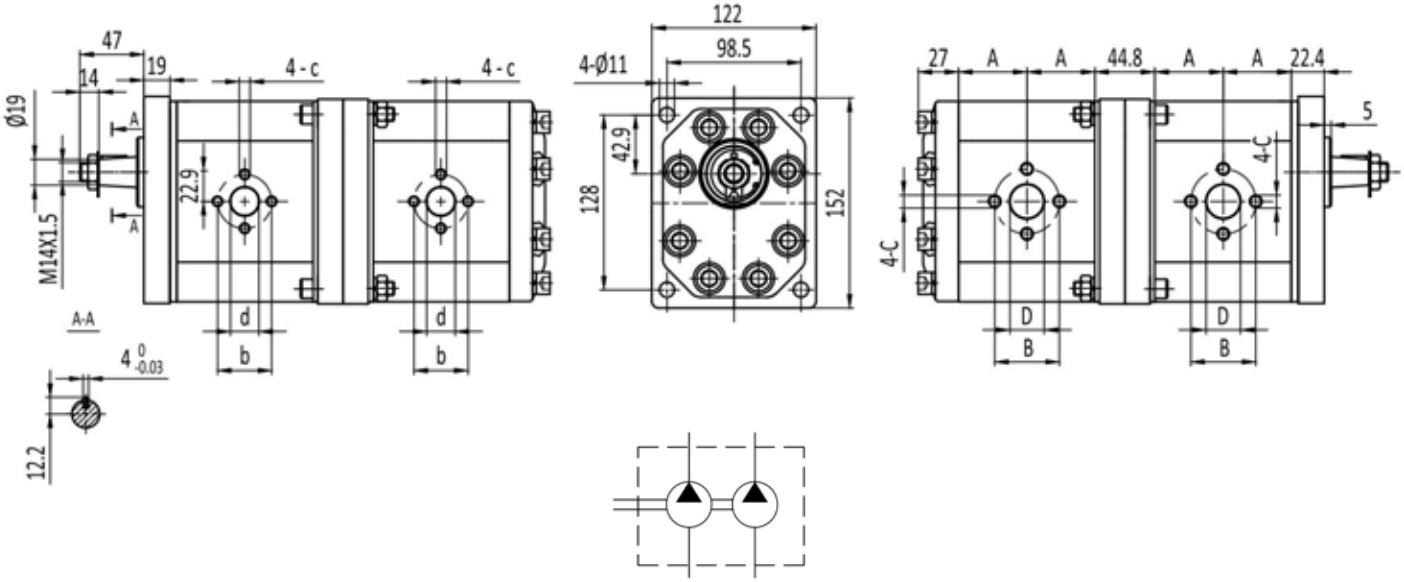


| Type | Displacement | Max. pressure | | | Max. | Min. | Dimensions | | | | | | |
|---|---|---|---|---|---|---|---|---|---|---|---|---|---|
| | | P1 | P2 | P3 | speed | speed | A | B | D | C | b | d | c |
| | (cm³/rev) | bar | bar | bar | (r/min) | (r/min) | mm | mm | mm | | mm | mm | |
| KGP3/2E8-D-**/**-Fa | 20 | 200 | 225 | 250 | 3000 | 600 | 40.6 | 40 | 19 | M8 | 40 | 19 | M8 |
| | 22 | 200 | 225 | 250 | 3000 | 600 | 41.6 | 40 | 19 | M8 | 40 | 19 | M8 |
| | 26 | 200 | 225 | 250 | 3000 | 600 | 43.1 | 40 | 19 | M8 | 40 | 19 | M8 |
| | 33 | 200 | 225 | 250 | 3000 | 500 | 46.1 | 51 | 27 | M10 | 40 | 19 | M8 |
| | 39 | 200 | 225 | 250 | 3000 | 500 | 49.6 | 51 | 27 | M10 | 40 | 19 | M8 |
| | 46 | 200 | 225 | 250 | 3000 | 500 | 52.6 | 51 | 27 | M10 | 40 | 19 | M8 |
| | 50 | 200 | 225 | 250 | 3000 | 500 | 54.6 | 51 | 27 | M10 | 40 | 19 | M8 |
| | 52 | 200 | 225 | 250 | 3000 | 500 | 55.6 | 51 | 27 | M10 | 40 | 19 | M8 |
| | 55 | 200 | 230 | 250 | 2800 | 400 | 56.6 | 51 | 27 | M10 | 40 | 19 | M8 |
| | 63 | 200 | 230 | 250 | 2800 | 400 | 60.6 | 62 | 33 | M10 | 51 | 27 | M10 |
| | 71 | 180 | 200 | 220 | 2500 | 400 | 64.1 | 62 | 33 | M10 | 51 | 27 | M10 |

# KGP3/3A8-Fb

★ Use axial gap automatic compensation mechanism.

★ High sustained working pressure and long service life .

★ Anti fouling ability is strong and suitable for power units , tractors ,machines and other kinds 0f hydraulic systems .

**OUTLET** **INLET**

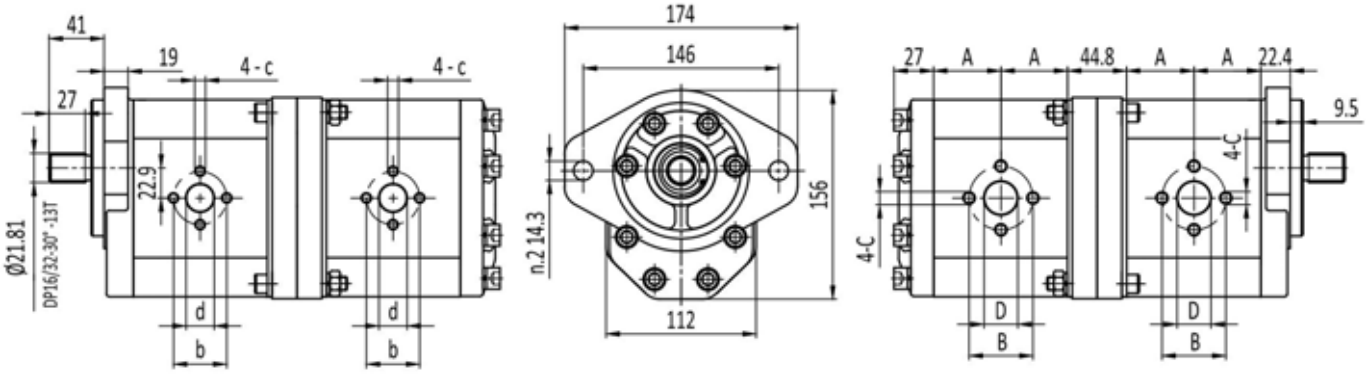


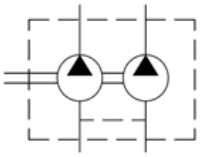

| Type | Displacement | Max. pressure | | | Max. | Min. | Dimensions | | | | | | |
|---|---|---|---|---|---|---|---|---|---|---|---|---|---|
| | | P1 | P2 | P3 | speed | speed | A | B | D | C | b | d | c |
| | ($cm^3$/rev) | bar | bar | bar | (r/min) | (r/min) | mm | mm | mm | | mm | mm | |
| KGP3/2A8-D-**/**-Fa | 20 | 200 | 225 | 250 | 3000 | 600 | 40.6 | 40 | 19 | M8 | 40 | 19 | M8 |
| | 22 | 200 | 225 | 250 | 3000 | 600 | 41.6 | 40 | 19 | M8 | 40 | 19 | M8 |
| | 26 | 200 | 225 | 250 | 3000 | 600 | 43.1 | 40 | 19 | M8 | 40 | 19 | M8 |
| | 33 | 200 | 225 | 250 | 3000 | 500 | 46.1 | 51 | 27 | M10 | 40 | 19 | M8 |
| | 39 | 200 | 225 | 250 | 3000 | 500 | 49.6 | 51 | 27 | M10 | 40 | 19 | M8 |
| | 46 | 200 | 225 | 250 | 3000 | 500 | 52.6 | 51 | 27 | M10 | 40 | 19 | M8 |
| | 50 | 200 | 225 | 250 | 3000 | 500 | 54.6 | 51 | 27 | M10 | 40 | 19 | M8 |
| | 52 | 200 | 225 | 250 | 3000 | 500 | 55.6 | 51 | 27 | M10 | 40 | 19 | M8 |
| | 55 | 200 | 230 | 250 | 2800 | 400 | 56.6 | 51 | 27 | M10 | 40 | 19 | M8 |
| | 63 | 200 | 230 | 250 | 2800 | 400 | 60.6 | 62 | 33 | M10 | 51 | 27 | M10 |
| | 71 | 180 | 200 | 220 | 2500 | 400 | 64.1 | 62 | 33 | M10 | 51 | 27 | M10 |

# KGP3/3

## PORTS VERSION

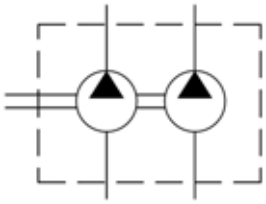

Fa

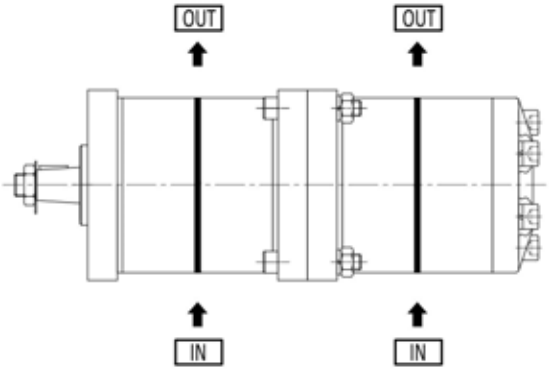


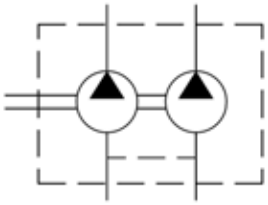

Fb